Sheet metal drafting, prepared in the Extension division of ...

Ellsworth M. Longfield

Digitized by Google

Library
of the
University of Wisconsin

Digitized by Google

Digitized by Google

Digitized by Google

SHEET METAL DRAFTING

Digitized by Google

McGraw-Hill Book Co. Inc.

PUBLISHERS OF BOOKS FOR

Coal Age ▾ Electric Railway Journal
Electrical World ▾ Engineering News-Record
American Machinist ▾ Ingeniería Internacional
Engineering & Mining Journal ▾ Power
Chemical & Metallurgical Engineering
Electrical Merchandising

Digitized by Google

INDUSTRIAL EDUCATION SERIES

SHEET METAL DRAFTING

PREPARED IN THE
EXTENSION DIVISION OF
THE UNIVERSITY OF WISCONSIN

BY

ELLSWORTH M. LONGFIELD
HEAD, SHEET METAL DEPARTMENT,
BOSTON TRADE SCHOOL

FIRST EDITION

McGRAW-HILL BOOK COMPANY, INC.
NEW YORK: 370 SEVENTH AVENUE
LONDON: 6 & 8 BOUVERIE ST., E. C. 4
1921

Digitized by Google

COPYRIGHT 1921, BY THE
MCGRAW-HILL BOOK COMPANY, INC.

Digitized by Google

245385
MAY 18 1921
TDV
.L86

69366

PREFACE

THIS text on "Sheet Metal Drafting" was prepared especially for correspondence-study instruction in the Extension Division of the University of Wisconsin. It is also admirably adapted as a text book for Vocational, Evening, and Part-time Schools.

The underlying principles of sheet metal pattern drafting are presented, each chapter discussing a different principle. The sequence of principles has been arranged with due regard to the well-known factors governing the student's progress through such a course of instruction. This arrangement has been successfully tested by several years of practical application in the teaching of the subject.

The problems in "Related Mathematics" point out the applications of mathematical principles to sheet metal work and serve as a guide for the proper correlation of the work in mathematics, drawing, and shop practice.

When the text is used for vocational, evening, and part-time schools, the articles considered in the various chapters can be manufactured in the shop school. When these are sold, the cost of instruction is considerably reduced without sacrificing the educational value of the course.

Acknowledgments are due Ben G. Elliott, M. E., Professor of Mechanical Engineering, University of Wisconsin, for his suggestions as to the general form and content of the text, and valuable editorial work.

ELLSWORTH M. LONGFIELD.

February, 1921.

Digitized by Google

Digitized by Google

CONTENTS

CHAPTER I

Rectilinear Figures

ARTICLE		PAGE
1.	Sheet Metal Drafting	1
2.	Orthographic Projection	2
3.	Drawing Instruments	3
4.	Lines	7
5.	Dimensions	8
6.	Lettering	9
7.	Titles	9
8.	Filing Circles	10
9.	The Sheet Metal Cleat	12
10.	Related Mathematics on Sheet Metal Cleat	13
11.	The Galvanized Match Box	14
12.	Related Mathematics on Galvanized Match Box	16
13.	The Candy Pan	17
14.	Related Mathematics on Candy Pan	19
15.	The Iron Bread Pan	21
16.	Related Mathematics on Iron Bread Pan	23

CHAPTER II

Wired Cylinders

17.	The Chimney Tube	30
18.	Related Mathematics on Chimney Tube	32
19.	Half-pint Cup	34
20.	Related Mathematics on Half-pint Cup	36
21.	The Painter's Pail	38
22.	Related Mathematics on Painter's Pail	40
23.	The Garbage Can	41
24.	Related Mathematics on Garbage Can	42

Digitized by Google

CHAPTER III

Cylinders Cut by Planes

ARTICLE		PAGE
25.	The Scoop	46
26.	The Two-piece Elbow	49
27.	The Two-piece 60° Elbow	52
28.	The Four-piece 90° Elbow	55
29.	The Long Radius Elbows	57
30.	Related Mathematics on Elbows	58
31.	The Backset Method	63

CHAPTER IV

Intersecting Cylinders

32.	Tee Joint at Right Angles	66
33.	The Tangent Tee at Right Angles	69
34.	The Tee Joint Not at Right Angles	72
35.	The Tangent Tee Not at Right Angles	75
36.	Related Mathematics on Tangent Tees and Tee Joints	76

CHAPTER V

Cones of Revolution

37.	The Conical Flower Holder	80
38.	Related Mathematics on Conical Flower Holder	82
39.	The Pitch Top Cover	83
40.	Related Mathematics on Pitch Top Cover	85
41.	The Vegetable Parer	86
42.	The Conical Roof Flange	89
43.	Related Mathematics on Conical Roof Flange	91
44.	The Apron for a Conical Roof Flange	93

CHAPTER VI

Intersecting Rectangular Prisms

45.	Three-piece Rectangular Elbow	96
46.	Related Mathematics on Elbows	97
47.	The Rectangular Pipe Offset	100
48.	Related Mathematics on Rectangular Pipe Offset	102
49.	The Diagonal Offset	103
50.	Related Mathematics on Diagonal Offsets	105
51.	The Curved Elbow in Rectangular Pipe	106
52.	Related Mathematics on Curved Elbows	106

Digitized by Google

CHAPTER VII

Planning for Quantity Production

ARTICLE PAGE
53. Planning for Quantity Production of an Ash Barrel 110
54. Related Mathematics on Ash Barrel 117

CHAPTER VIII

Sections Formed by Cutting Planes

55. The Sprinkling Can 120
56. Related Mathematics on Sprinkling Can 123
57. Boat Pump 125
58. Related Mathematics on Boat Pump 127
59. The Roof Flange 129

CHAPTER IX

Frustums of Rectangular Pyramids

60. Dripping or Roasting Pan 136
61. Related Mathematics on Dripping Pans 138
62. Rectangular Flaring Pans 140
63. Related Mathematics on Rectangular Flaring Pans 142
64. Register Boxes 143
65. Related Mathematics on Register Boxes 145

CHAPTER X

Combinations of Various Solids

66. Atomizing Sprayer 148
67. Related Mathematics on Atomizing Sprayer 150
68. Ash Pan with Semicircular Back 153
69. Related Mathematics on Ash Pan 155
70. Rotary Ash Sifter 156
71. Related Mathematics on Rotary Ash Sifter 160

CHAPTER XI

Frustums of Cones

72. Cup Strainer 162
73. Related Mathematics on Cup Strainer 164
74. Short Handled Dipper 165
75. Related Mathematics on Short Handled Dipper 167
76. Liquid Measures 169
77. Related Mathematics on Liquid Measures 171

Digitized by Google

CHAPTER XII

Return and Face Miters

ARTICLE PAGE
78. Square Return Miter 174
79. Conductor Head 177
80. Related Mathematics on Conductor Head 178
81. Face Miters 180
82. Window Cap 182

CHAPTER XIII

Triangulation of Scalene Cones

83. Scalene Cone 186
84. Square to Round Transition 188
85. Oval to Round Transition 191
86. Related Mathematics on Oval to Round Transition 193

CHAPTER XIV

Triangulation of Transition Pieces

87. Transition between a Square Pipe and the Second Piece of an Elbow . 196
88. Transition between an Oval Pipe and the Second Piece of an Elbow . 200

CHAPTER XV

Developments by Sections

89. The Frustum of a Scalene Cone 204
90. Center Offset Boot 207
91. Square to Round Split Header 210
92. Related Mathematics on Split Headers 213

CHAPTER XVI

Developed and Extended Sections

93. Oval to Round Elbow 216
94. Breeches 221
95. Coal Hod 225
Index 229
Index of Problems 235

Digitized by Google

SHEET METAL DRAFTING

CHAPTER I

RECTILINEAR FIGURES

1. Sheet Metal Drafting.—Sheet metal drafting is merely the application of the principles of ordinary mechanical drawing to objects which, for the purposes of drawing, lack thickness. By this is meant that the materials dealt with are usually in the form

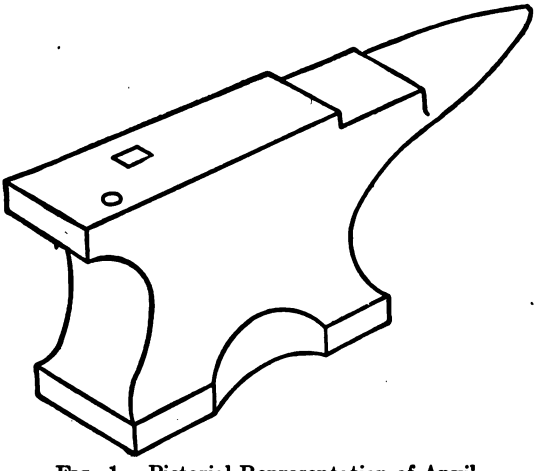

FIG. 1.—Pictorial Representation of Anvil.

of thin sheets and that their thickness is so slight that it may be represented by a line rather than by four lines and an included surface. The ordinary rules and conventions in use in mechanical drawing apply in general to sheet metal drafting. A knowledge of elementary arithmetic is also essential.

Digitized by Google

2. Orthographic Projection.—Before attempting to make any drawings, one must first get a clear idea of the way in which objects are represented in mechanical or orthographic drawings. If a person is going to make a photograph of an object, he nearly always makes a view taken from one corner so as to show as many sides as possible in order to give a complete idea of the object in one picture. For example, Fig. 1 shows how an anvil would be represented in a single view or picture so as to give a complete idea of its shape. Such a drawing of most objects would be very

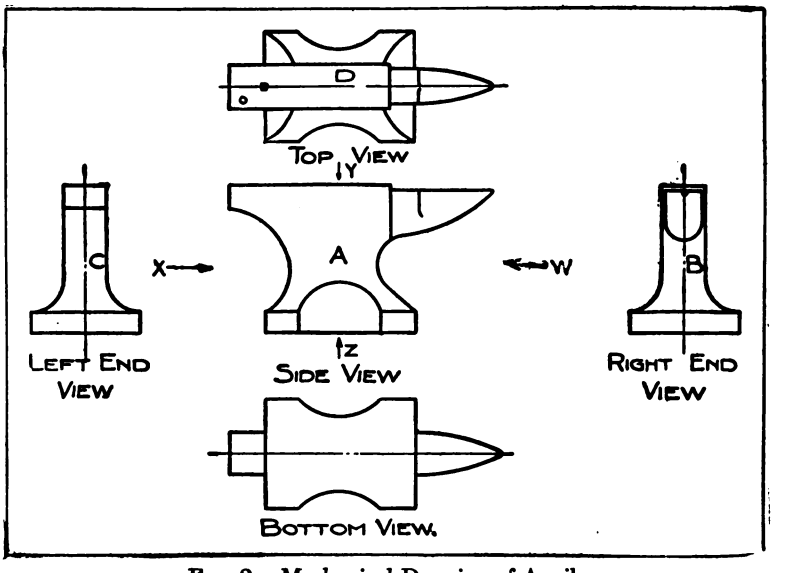

FIG. 2.—Mechanical Drawing of Anvil.

complicated or difficult to make, and even then in many cases it would not give the complete idea. Instead of making a pictorial drawing, the draftsman makes two or more views as if he were looking straight at the different sides of the object as in Fig. 2. At *A* is shown what would be called a "front elevation," meaning a view of one side taken from the front with the anvil set up in its natural position. At *D* is shown the "plan" or top view. This shows what would be seen by looking down on the anvil from above along the direction of the arrow *Y*. At *B* and *C* are shown the views of the ends as seen by looking along the arrows, *W* and *X*. These views are called the "right end elevation" and

Digitized by Google

"left end elevation," depending upon whether the view is that of the right end or the left end. At *E* is shown the bottom view, which would be that obtained by looking up from beneath in the direction of the arrow, *Z*. These views are not all needed to show the complete shape of the anvil. They are, however, all the different views that might be used by the draftsman. These "views" are also called the "projections" of the object, and this method of showing it is called "projection."

Drawings are made in the drafting room and are then sent to the shop so that the object shown can be made. Consequently, all drawings must have complete information on them so that no questions need be asked. Besides showing the shape and size of

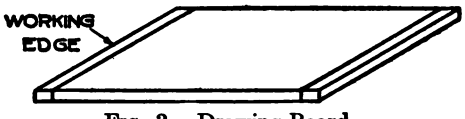

FIG. 3.—Drawing Board.

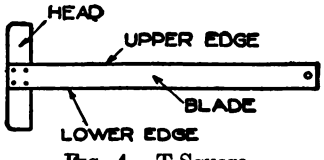

FIG. 4.—T-Square.

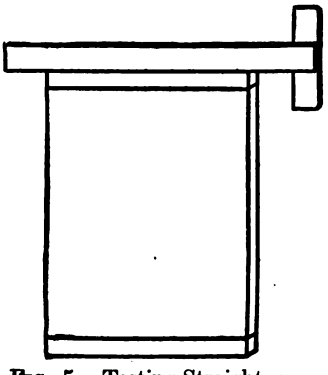

FIG. 5.—Testing Straightness of Working Edges.

the parts, the drawings must have full information as to the material to be used, its gage, number wanted, etc.

3. Drawing Instruments.—*The Drawing Board and T-Square.*—The drawing board, Fig. 3, is for the purpose of holding the paper while the drawing is being made. It is usually made of some soft wood, free from knots and cracks and provided with cleats across the back or ends.

The T-square, Fig. 4, consists of a head and blade fastened together at right angles. The upper or working edge of the blade is used for drawing all horizontal lines (lines running the long way of the board) and must be straight.

The left end of the drawing board must also be straight. The working edge of the T-square and the working edge of the drawing

Digitized by Google

board may be tested for straightness by holding them as shown in Fig. 5. They should be in contact along their entire length. If they are not, one or the other is not straight.

The working position of the drawing board and T-square is illustrated in Fig. 6. In this position the blade of the T-square can be moved up and down over the surface of the board with the left hand while holding the head firmly against the working edge

FIG. 6.—Working Position of Drawing Board and T-Square.

of the board. For a left-handed man, the working edge of the board will be at the right, with the head of the T-square held firmly in place with the right hand.

All horizontal lines should be drawn with the T-square, drawing from left to right, meanwhile holding the head of the T-square firmly against the working edge of the board with the left hand.

The Triangles.—The triangles are used for drawing lines other than horizontal. They are made of hard rubber, celluloid, wood,

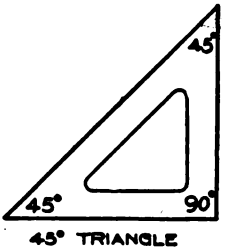

45° TRIANGLE

FIG. 7.

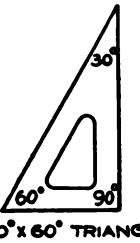

30° x 60° TRIANGLE

FIG. 8.

or steel. There are two common shapes, called the 45° triangle and the 30°×60° triangle. These are illustrated in Figs. 7 and 8. The 45° triangle, shown in Fig 7, has one angle (the one marked 90°), a right angle. There are 90° in a right angle. The other angles are 45° each (just half of a right angle). One angle of the 30°×60° triangle is a right angle; another angle is 60° (just $\frac{2}{3}$ of a right angle); and the other is 30° (just $\frac{1}{3}$ of a right angle).

For drawing vertical lines (lines at right angles to the horizontal lines which have already been explained), the T-square should

Digitized by Google

be placed in its working position and one of the triangles placed against its working edge. In Fig. 9 is shown the correct position

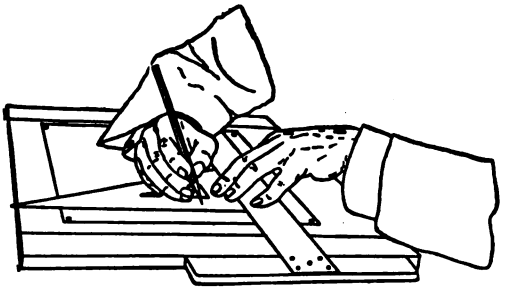

FIG. 9.—Drawing Vertical Lines by the Use of T-Square and Triangle.

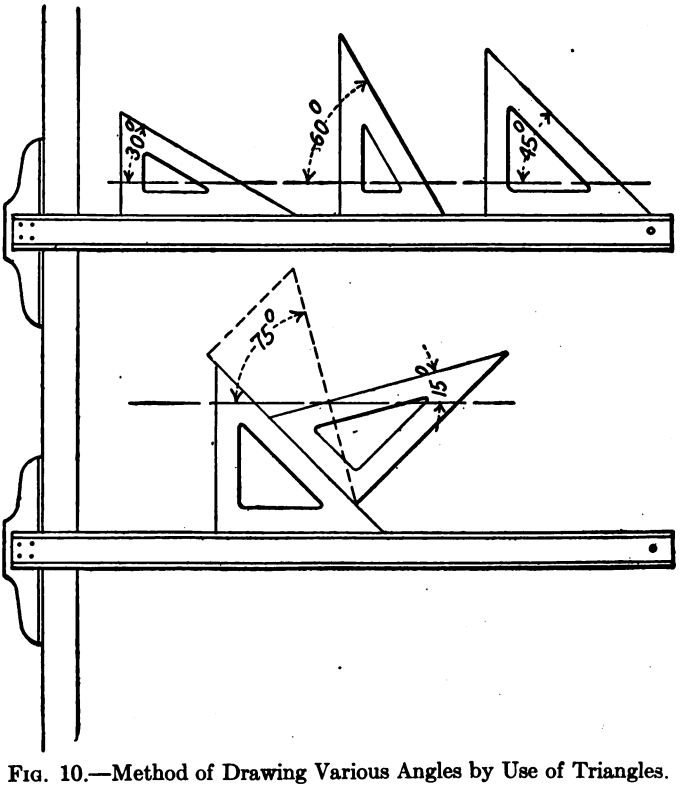

FIG. 10.—Method of Drawing Various Angles by Use of Triangles.

of the hands and the method of holding the pencil for drawing these lines.

Digitized by Google

Figure 10 illustrates the method of getting various angles by means of the triangles separately and in combination. These angles, of course, can be drawn in the opposite slant by reversing the triangles.

Always keep the working edge of the triangle toward the head of the T-square and draw from the bottom up, or away from the body.

The Pencil.—The pencil must be properly sharpened and kept sharp. Good, clean-cut lines cannot be made with a dull pencil.

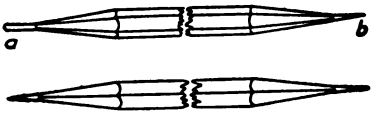

FIG. 11.—Pencil Sharpened in the Proper Way.

A pencil sharpened in the proper way is shown in Fig. 11. The end "*a*" shows the chisel point which is used for drawing lines; the end "*b*" shows the round point used for marking off distances and for putting in dimensions, lettering, etc. About $\frac{3}{8}$ in. of lead should be exposed in making the end "*a*." Then it should be sharpened flat on two sides by rubbing it on a file or piece of sandpaper.

The Scale.—A scale is used in making a drawing on an ordinary-sized sheet of paper, so that the drawing is of the same size as the object, or some number of times larger or smaller than the object.

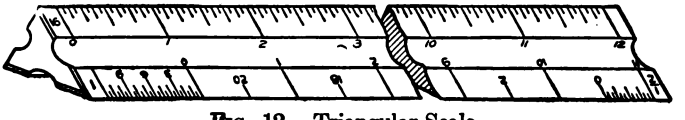

FIG. 12.—Triangular Scale.

The triangular scale illustrated in Fig. 12 has six different scales, two on each side.

The ordinary architect's triangular scale of Fig. 12 has eleven scales. On the scale of three inches equals one foot, a space that is three inches long is divided into twelve equal parts, each of which represents an inch on the reduced scale and is itself subdivided into two, four, eight, or sixteen equal parts, corresponding to halves, quarters, eighths, or sixteenths of an inch. The other scales are constructed in the same way. A little study of the scale with the above description of its construction will make its use clear.

Digitized by Google

4. Lines.—In Fig. 13 the names and uses of various kinds of lines which are used in making a drawing are shown. This figure also shows a table of the relative weights of these lines.

Border Lines.—The border line needs no detailed explanation.

Object or Projection Lines.—The visible object line is a line that represents any definite edge that may be seen from the position that the observer assumes in obtaining the given view. The invisible object or projection line represents a line or edge of an object that cannot be seen from the observer's point of view but which actually exists and may be seen from some other position or point of view. For instance, the drawing board cleats on the bottom

CHARACTER OF LINE	NAME OF LINE	WEIGHT OR WIDTH OF LINE
	BORDER	$\frac{1}{32}$"
	OBJECT OR PROJECTION (VISIBLE)	$\frac{1}{64}$"
	" " " (INVISIBLE)	$\frac{1}{64}$"
	BENDING LINE	$\frac{1}{64}$"
	CENTER LINE	$\frac{1}{128}$"
	EXTENSION LINE	$\frac{1}{128}$"
	DIMENSION LINE	$\frac{1}{128}$"
	SECTION LINE	$\frac{1}{128}$"
	BROKEN MATERIAL	$\frac{1}{64}$"

FIG. 13.—Lines Used in Drawing.

could not be seen from above, but could be seen from the sides or when the board was held above the eye. For the sake of determining the relation of such cleats to some other member that might be required on the top of the board, the cleats would be shown by invisible or broken lines on the top view.

Bending Lines.—The lines that are drawn on a layout or pattern of an object to indicate the location of an edge in the completed object are called bending lines, since they locate on the layout or pattern the line along which a bend must be made. These lines differ from the regular object or projection lines only by having at each end a small free-hand circle drawn upon them. Bending lines are drawn differently by different authors and in some shops,

Digitized by Google

but as long as a definite logical system is followed it does not make much difference what system it is.

Center Lines.—Center lines are, in general, lines of symmetry; that is, they usually divide the views of an object into two equal though not exactly similar parts, since one is right-handed and the other left-handed. In some cases, however, the two parts are sometimes unequal, as well as dissimilar.

Center lines are used to aid in dimensioning; to line up two or more related views; and to fix definitely the centers of circles. All circles have two center lines at right angles to one another, usually a vertical and a horizontal center line.

Extension Lines.—Extension lines are used to extend object or projection lines in order to line up related views and to insert dimensions without placing them on the object itself, causing

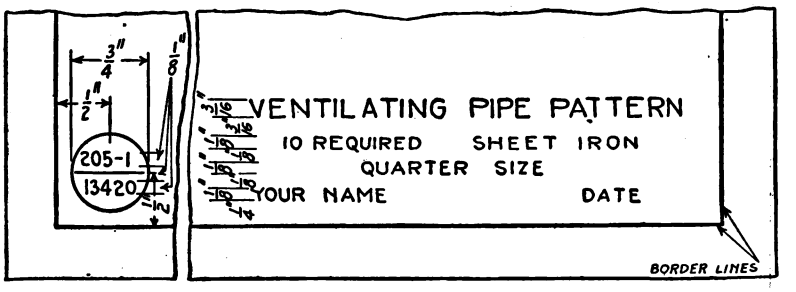

FIG. 14.—Simple Title for Drawing.

a confusion of lines. They should fail to touch the object by about $\frac{1}{16}$ in.

Dimension Lines.—Dimension lines are used with arrowheads at each end to show the limits of a given dimension. The lines are broken at some point, usually near the center, in order to insert the figures.

5. Dimensions.—Dimensions up to 24 inches are, in general, given in inches, as $16\frac{1}{2}''$. Above 24 inches, practice varies, but, in general, feet and inches are used as $3'-2\frac{1}{2}''$, for 3 feet $2\frac{1}{2}$ inches.

Vertical figures about $\frac{1}{8}$ in. high are usually used for dimensions. Fractions should be as large as whole numbers and care should be taken to see that the figures do not touch the dividing line. The dividing line of a fraction should be on a level with the dimension line as in Fig. 14.

Digitized by Google

Horizontal dimensions should be read from the bottom of the sheet, and vertical dimensions from the right-hand side of the sheet as in Fig. 16.

FREEHAND LETTERING

ABCDEFGHIJKLMNOPQRSTUVWXYZ&

1234567890

ABCDEFGHIJKLMNOPQRSTUVWXYZ&

1234567890 $4\frac{5}{8}$ $3\frac{9}{16}$ $7\frac{1}{2}$

FIG. 15.—Satisfactory Style of Lettering for Sheet Metal Drawings.

6. Lettering.—Lettering is very important for the draftsman, and ability to make good letters is a good asset for anyone. Figure 15 shows the type of lettering that is very frequently used and that is probably most easily made. The strokes for forming the letters are shown by the arrows.

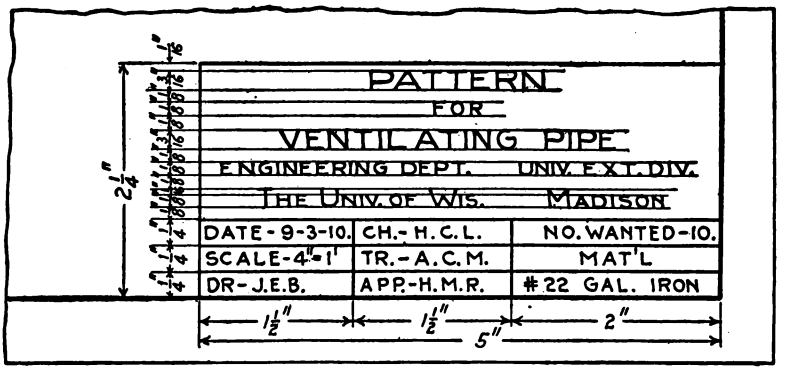

FIG. 16.—Detailed Title Corner.

7. Titles.—No drawing is complete without a title which gives such information as the drawing itself fails to impart. Figures 14 and 16 illustrate two different titles, of which the former is the simpler. Figure 16 represents a title such as would appear on an up-to-date shop drawing made in a large office where it would have to be traced, checked, and approved before being blue printed.

Digitized by Google

8. Filing Circles.—In all well-regulated manufacturing establishments some system of filing away the drawings is used so that they may be easily found when needed.

In one such system, filing circles are placed, one at the lower left-hand corner of the sheet and another, upside down, at the upper right-hand corner, so that no matter how the drawing is placed in the drawer, a filing circle will always appear at the lower left-hand corner.

Figure 14 shows the size of the circle to be used, its location on the sheet, and three different numbers. The first number on the upper line represents the number of the general order; the second number is the number of the detail sheet under this general order; and the bottom number is the number of the section or drawer in the filing case in which this sheet is to be found. A card index is used in connection with this filing system to facilitate the location and the handling of the drawings.

Digitized by Google

No.	Job	Drawing Objectives	Mathematical Objectives
1	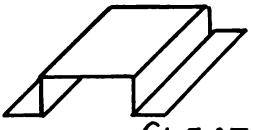 Cleat	Idea of stretch-out, profile and front elevation. Dimensioning the drawing. Accurate measurements.	Definition of "Girth" and "Cut" Addition of fractions.
2	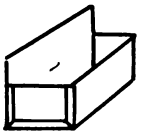 Match Box	Front & side elevations. Locating holes to be drilled. Lapped and soldered joints	Addition of fractions. Multiplication of fractions. Area of rectangle.
3	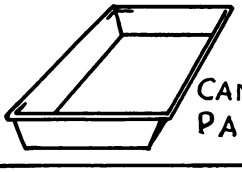 Candy Pan	Allowances for wiring Conception of rectangle flaring work	Decimals. Cutting stock to advantage. Percentage of waste.
4	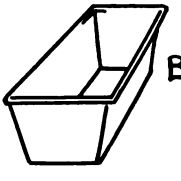 Bread Pan	Double seamed ends. Notching for seams & wire	Area of trapezoid. Weight of pan.

Objectives of Problems on Rectilinear Figures.

Digitized by Google

Problem 1

LAYING OUT A METAL CLEAT

9. The Sheet Metal Cleat.—The work of this problem will consist in laying out, to full size, the views and pattern for a galvanized sheet metal cleat. In making the layout for this cleat, the following points must be kept in mind:

1. The proper relation of views in a drawing.
2. How to dimension a drawing.
3. Accuracy in the use of the scale rule.

This cleat is to be formed from a flat piece of No. 16 galvanized iron; all the bends to be made to an angle of 90°. Figure 17 represents the cleat as it would appear on a photograph.

Before starting the layout, it must first be determined how many faces the cleat has. By holding the cleat with the largest surface directly in front of the eyes, three of these faces can be seen. A drawing should be made of what is actually seen. This drawing would appear as shown in Fig. 18. This view is called the *front elevation* and from it the exact sizes of the three faces or surfaces shown can be determined.

If the cleat is turned so that the eyes see the thin edge of the metal, the view will be as shown in Fig. 19. This view is called the *profile* because it is the exact shape or outline to which the cleat must be formed in the shop.

In drawing the profile, it can be located directly under the front elevation by using extension lines such as shown. In addition to showing the exact outline of the cleat, the profile also shows the dimensions necessary for laying out the pattern. In order to transfer these dimensions to the line of stretchout on the pattern, the profile should be numbered as indicated.

The front elevation and profile furnish all the information required to lay out the pattern. Consequently, there is no need to draw other views.

The line of stretchout is always drawn at right angles to the side of the view from which the pattern is to be taken. Upon this line of stretchout, all of the distances (called the spacing of the profile) of the profile should be placed and numbered to correspond. This has been done in Fig. 20. Perpendicular lines are then drawn through these numbered points. These are called the

Digitized by Google

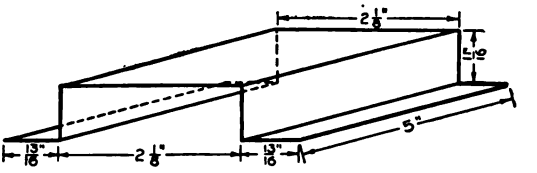

FIG. 17

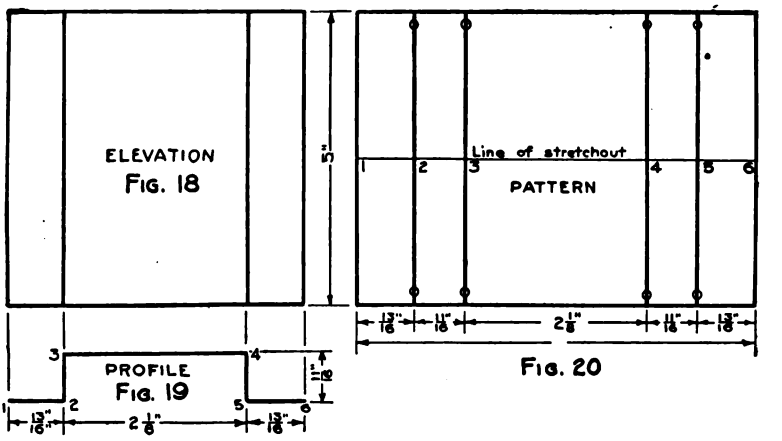

FIGS. 17–20.—Sheet Metal Cleat.

measuring lines of the stretchout. Extension lines carried over from the elevation locate the top and bottom lines of the pattern. The side lines of the pattern are formed by measuring lines No. 1 and No. 6. Small free-hand circles should be placed as shown to indicate to the workman where the bends are to be made. The views and the pattern must be fully dimensioned.

10. Related Mathematics on Sheet Metal Cleat.—If the drawing is correct, the sum of all the lines in the profile will be equal to the length of the line of stretchout.

Problem 1A.—Compute the sum of all the lines in the profile from the dimensions given in Fig. 17. Measure the length of the line of stretchout in Fig. 20 and compare with the sum of the profile lines. If the answers do not agree, either the drawing or the arithmetic is incorrect. They should be made to agree.

Digitized by Google

Problem 2

GALVANIZED MATCH BOX

11. The Galvanized Match Box.—In laying out the views and the pattern for the galvanized match box, special attention should be directed to the following:

1. Locating holes accurately.
2. Showing hidden hems and surfaces.
3. Showing lapped and soldered joints.

Figure 21 shows a rectangular match box having the back raised above the other upright surfaces. There are two screw holes drilled or punched in the back.

The top edges of the back, the ends, and the front side are provided with a $\frac{3}{16}$-inch hem so that the edge will be smooth. The hems on the top of the back and on the right end can be seen in Fig. 21, but the hems on the top of the front and the left end cannot be seen from the outside because they are hidden from view. These hems are shown by dotted lines. The dotted line is always used to show the position of a line which cannot be seen. All dotted lines in this view represent lines or edges which cannot be seen.

This box has five surfaces, a back, a front, two ends, and a bottom. A full size elevation of the end surface will appear as in Fig. 22. The hem on the top edge of the end surface is shown by a dotted line and the lap by a solid line. This end elevation is also a profile view, and dimensions taken from it can be used in laying out the line of stretchout for the pattern. The end elevation is, therefore, numbered in a way similar to that in Fig. 19 of Problem 1.

The front elevation is constructed by using the extension lines from the end elevation. This front elevation shows the length of the box, together with the location of the two holes in the back.

As in Fig. 20 of Problem 1, the line of stretchout is drawn at right angles to the view from which the pattern is to be taken. The line of stretchout should be numbered to correspond to the profile numbering in the end elevation. Extension lines dropped from the front elevation determine the outside edges of the box on the pattern. The $\frac{3}{16}$-inch hems must be added at the top and the bottom of the stretchout line. The $\frac{1}{4}$-inch laps must also be added

Digitized by Google

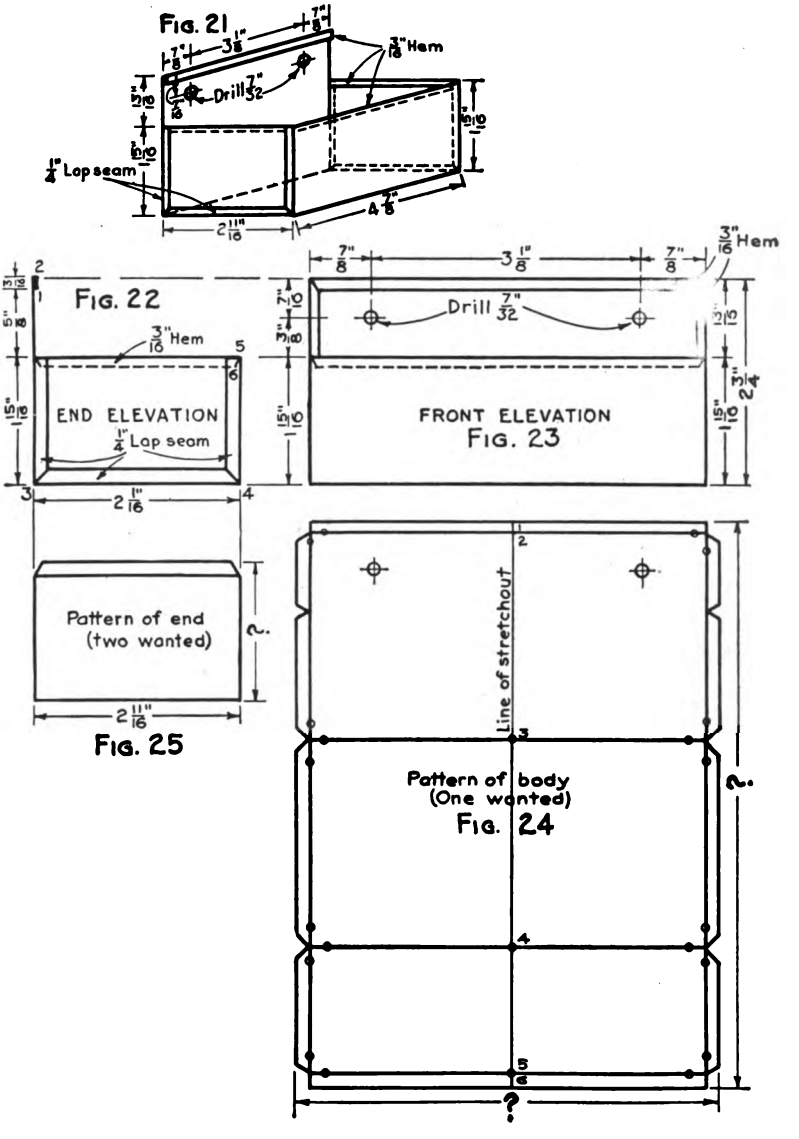

FIGS. 21–25.—Galvanized Match Box.

Digitized by Google

to the remaining edges of the pattern. Free-hand circles must be placed to indicate where the bends are to be made. Suitable notches are provided at the laps so that they will fit together at an angle of 90° at the bottom corners of the box.

A separate pattern must be drawn for the two ends of the box, as these are not included in the main pattern. Extension lines dropped from the end elevation will determine the length of the end pieces. The height of the end pieces can be taken either from the pictorial view in Fig. 21, or from the end elevation. A $\frac{3}{16}$-inch hem must be added to the top of the end pattern as shown. The ends of the hem are notched slightly as indicated.

The over-all dimensions of the patterns should be put in as indicated by the question marks on the drawing. The end and front elevations are to be dimensioned as indicated in Figs. 22 and 23.

12. Related Mathematics on Galvanized Match Box.—*Girth and Cut.*—The "Girth" is the distance around the profile view. The "Cut" is the distance around the profile plus the laps or locks necessary to join the pieces of metal together.

Over-all Dimensions.—Dimensions showing the sizes of the blank pieces of metal required to "get out" the job should be placed upon every pattern. These are known as "over-all" dimensions, as they include both the pattern and the edges allowed. Dimension lines for this purpose are indicated on Fig. 24 by question marks.

Rectangle.—A rectangle is a flat surface bounded by four straight lines forming right angles at their points of meeting. Figures 20 and 24 are examples of rectangles. *The area of a rectangle is equal to the length multiplied by the width.*

Problem 2A.—Compute the over-all dimensions from Fig. 22. Check these answers by measuring the drawing, and place the correct figures on the over-all dimension lines of Figs. 24 and 25.

Problem 2B.—Find the area of Fig. 24 and also the area of Fig. 25. (Use over-all dimensions.)

Problem 2C.—Find the total area of the metal required to construct the box. (One body and two end pieces.)

Digitized by Google

Problem 3

CANDY PAN

13. The Candy Pan.—As already pointed out in the previous problem, the elevation view of an object may sometimes be used as a profile for laying out the pattern. This is the case with the layout of the tin candy pan considered in this problem. Particular attention should be given to the methods of wiring the top of this pan.

The pan shown in Fig. 26 is known to the sheet metal trade as a rectangular flaring pan. Flaring is another word for tapering. Since the sides flare or taper, the bottom of the pan must be smaller than the top. This pan has an equal flare on all sides. Some pans have an unequal flare; that is, some of the sides taper more than others. This candy pan is to be made of sheet tin, wired with No. 12 wire, the corners to be lapped and soldered.

A full size elevation, as in Fig. 27, showing one corner broken away to reveal the wire, is to be drawn. Care should be taken that the flare is equal on both sides. As stated before, this elevation also serves as a profile and is numbered 1, 2, 3, and 4. It should be noticed, in numbering the profile, that the metal necessary to cover the wire is not included. This is on account of the fact that there is a standard allowance for covering wire. *For covering a wire with metal, add an edge to the top of the pattern equal to $2\frac{1}{2}$ times the diameter of the wire.* This allowance, however, must be increased for metal heavier than No. 23 gage.

The plan view is drawn below the elevation as shown in Fig. 28. The line of stretchout is laid out at right angles to the long side of the plan. The spacing of the profile is laid off on the stretchout and is numbered to correspond. The allowance for covering the wire must be computed according to the rule given above. Number 12 wire has a diameter of approximately $\frac{7}{64}$ in. This allowance for wiring is set off to the right of No. 4 and to the left of No. 1 on the line of stretchout. The measuring lines of the stretchout are then drawn. The extension lines from the plan are carried over to the stretchout view and the pattern of one of the flaring sides constructed as shown in Fig. 29. Since the flare is equal on all sides of the pan the other three sides can be laid out

Digitized by Google

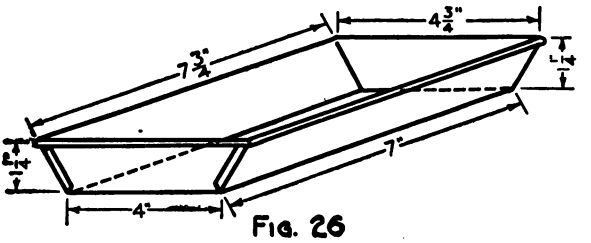

FIG. 26

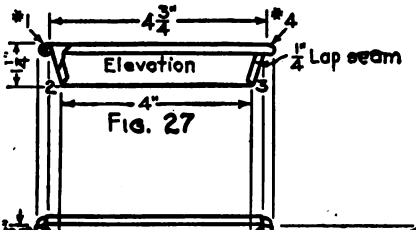

FIG. 27

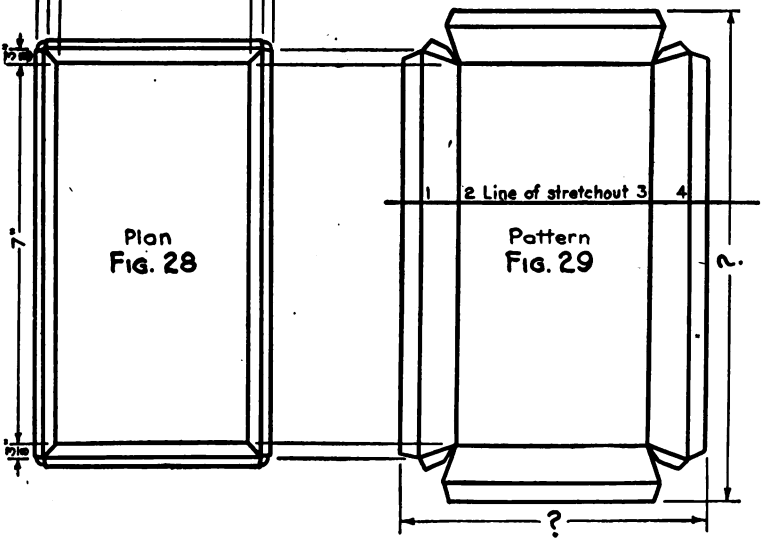

FIG. 28 FIG. 29

FIGS. 26–29.—Candy Pan.

Digitized by Google

from the side already drawn. A $\frac{1}{4}$-inch lap is added to the long sides of the pattern at each corner.

All necessary dimensions should be placed on the plan and elevation, and all over-all dimensions on the pattern.

14. Related Mathematics on Candy Pan.—*Problem 3A.*—The candy pan shown in Fig. 26 is to be made of IXX Charcoal Tin. (Read two cross charcoal tin.) This tin is generally carried in stock in two sizes of sheets, 14″×20″ and 20″×28″. Calculate the area in square inches of a sheet 20″×28″.

Problem 3B.—What is the area of Fig. 29? Use over-all dimensions.

Problem 3C.—What is the largest number of blanks (Fig. 29) that could be cut from a sheet of 20″×28″ tin?

Problem 3D.—What are the dimensions of the pieces of tin left after cutting the blanks from the sheet?

Problem 3E.—What is the total area of the pieces of tin left?

Problem 3F.—Divide the total area of tin wasted (Problem 3E) by the total area of the sheet (Problem 3A). The result will be the percentage of the 20″×28″ that is wasted.

Problem 3G.—Divide the total area of tin wasted (Problem 3E) by the number of blanks obtainable (Problem 3C). This will give the amount of tin wasted per blank. Divide this result by the total area of one blank (Problem 3B) to get the percentage of waste per blank or per pan.

Illustrative Examples

Tin blanks 6″×8″ are to be cut from a sheet of 14″×20″ tin plate. The problem is to find the maximum number of blanks obtainable and the percentage of waste.

Example of Problem 3A.

width 14″
×
length 20″

280 sq. in., area. *Ans.* 280 sq. in., area.

Example of Problem 3B.

width 6″
×
length 8″

48 sq. in., area. *Ans.* 48 sq. in., area of blank.

Example of Problem 3C.

(See Fig. 30.) *Ans.* 4 blanks.

Digitized by Google

Example of Problem 3D.

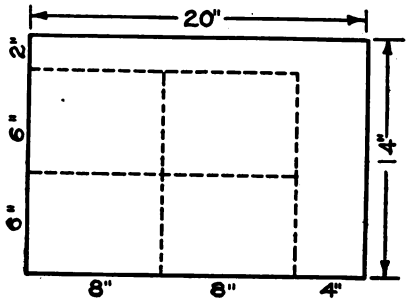

FIG. 30.

Example of Problem 3E.

$2'' \times 16'' = 32$

$4'' \times 14'' = 56$

Total 88 sq. in.

Ans. $2'' \times 16''$ and $4'' \times 14''$ or $2'' \times 20''$ and $4'' \times 12''$

Ans. 88 sq. in., total waste.

Example of Problem 3F.

(Area of sheet) 280 | 88.000 (area of waste) | .314

84.0

4 00

2 80

1 200

1 120

80

Ans. 31.4%, waste per sheet.

Example of Problem 3G.

$88 \div 4 = 22$ sq. in., waste per blank.

(Area of blank) 48 | 22.00 (waste) | .46 (approx.)

19 2

2 80

2 88

Ans. 46% waste per blank.

Digitized by Google

Problem 4

BREAD PAN

15. The Iron Bread Pan.—The particular feature of the construction of this bread pan is the method of joining the body to the end by double seams.

The bread pan, Fig. 31, is to be made of No. 28 black iron. It is to be wired with No. 8 wire and the ends are to be double seamed in. Figure 36 shows that this double seaming is accomplished by turning a hook on the body and a right-angled bend on the end. After being shipped together, these edges are hammered down to form the double seam. The *Double Edge* is the trade name for the hook that is turned on the body. The *Single Edge* is the trade name given to the right-angled bend on the end. Allowance must be made for the metal necessary to make these bends. This allowance is called the "Take-up" and is indicated in Fig. 36.

The end elevation is drawn first and the points of the profile numbered 1, 2, 3, and 4 as shown in Fig. 32. The front elevation can be located by using the extension lines from the end elevation. The line of stretchout is drawn at right angles to the bottom of the pan. The spacing of the profile and the corresponding numbers are then transferred to the line of stretchout. This pan is to be wired around the top with a No. 8 wire which is $\frac{5}{32}$ in. in diameter. After this allowance for wiring is computed, this distance must be added to the line of stretchout outside of points 1 and 4. After the measuring lines are drawn on the pattern, extension lines are dropped from the front elevation into the stretchout. These will locate the extreme points of the top and the bottom and permit the drawing of the outline of the body pattern as shown in Fig. 34. Three-eighths inch double edges are added as shown. The bending lines of the double edges are drawn $\frac{1}{8}$ in. in from the outside edge. This allows $\frac{1}{16}$ in. for take-up.

The pattern of the end is constructed by dropping extension lines from the end elevation and by carrying extension lines over from the upper surface of the body pattern. The intersections of these extension lines will locate the corners of the end pattern as in Fig. 35. Three-sixteenths inch edges are added on the three

Digitized by Google

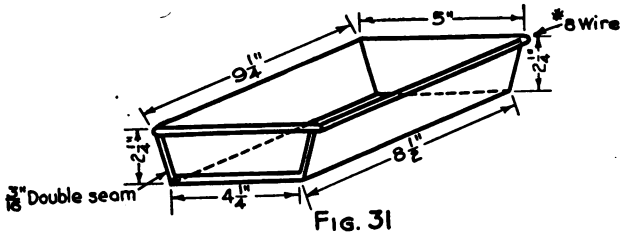

FIG. 31

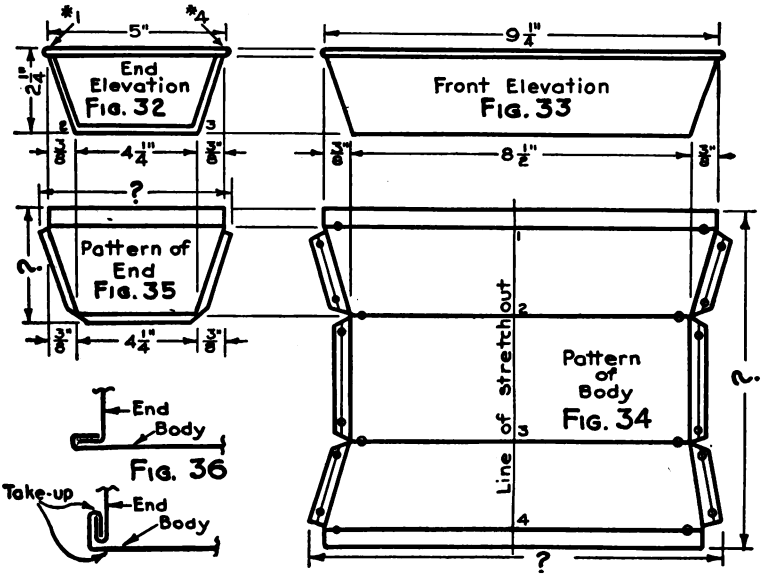

FIGS. 31–36.—Iron Bread Pan.

Digitized by Google

sides as indicated. The bottom corners of the end pattern are notched straight across. The single and double edge notches should be dropped below the bending line at the top of the pan a distance equal to the diameter of the wire. This will allow the wire to lay against the pan instead of riding over the double seams.

All necessary dimensions should be placed on the front and end elevations and the over-all dimensions on the pattern.

16. Related Mathematics on Iron Bread Pan.—*Trapezoid.*—A trapezoid is a flat surface bounded by four straight lines only two of which are parallel. The parallel sides are known as the upper and lower bases of the trapezoid.

The area of a trapezoid is equal to one-half the sum of the bases multiplied by the altitude. The altitude of any surface is always the shortest distance between its upper and lower parts. The altitude must always be measured at right angles to the lower base.

Problem 4A.—How many body blanks, Fig. 34, can be cut from a sheet of black iron 30″ wide and 96″ long? Treat the pattern as a rectangle using the over-all dimensions.

Problem 4B.—Could any of the pieces left from the body blanks be used for end blanks? If so, how many end blanks could be obtained from these?

Problem 4C.—What is the total area of the waste pieces?

Problem 4D.—What is the percentage of waste for one body blank?

Problem 4E.—By reversing the end pattern when laying out on the sheets some material may be saved. Show by a sketch how to effect this saving of material from a 30″×96″ sheet. How many end blanks can be obtained from one of these sheets?

Problem 4F.—What is the total area of the waste pieces from one of the above sheets?

Problem 4G.—What is the area of one end blank? What is the percentage of waste?

Problem 4H.—The bread pans are to be made of No. 28 black iron weighing .625 lb. per sq. ft. How much will 1000 body patterns weigh after corrections are made for waste? How much will 2000 end patterns weigh after corrections are made for waste? What will be the correct weight of 1000 of these pans?

Digitized by Google

Illustrative Examples

1000 bread pans 4″×8″×2″ deep with ½″ flare on all sides are to be made. The size of the body pattern is 7⅞″ by 8½″. The size of the end pattern is: top 4½″, bottom 3½″, depth 2½″.

Example of Problem 4A.

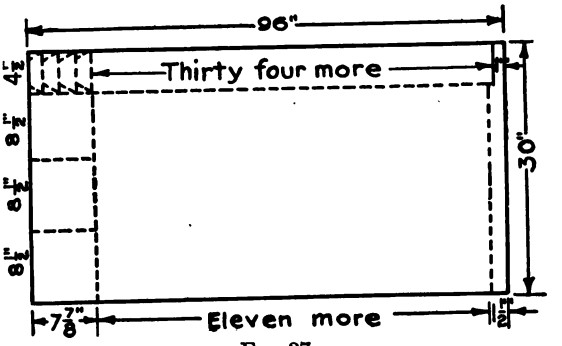

FIG. 37.

Ans. (*a*) 36 blanks for body.
(*b*) 38 blanks for ends.

Example of Problem 4C.

1 piece 1½″×25½″ = 38.25 sq. in.
1 piece 4½″×1″ = 4.50 sq. in.

Total 42.75 sq. in. *Ans.* 42.75 sq. in., waste from bodies.

Example of Problem 4D.

length 8.5″
×
width 7.875″

66.93 sq. in., area of body.

(Area) 66.93 | 1.1800 (waste) | .017
6693
51070
46851

Total waste 42.75 ÷ 36 = 1.18 sq. in., waste per blank.

Ans. 1.7%, waste per body blank.

Digitized by Google

Example of Problem 4E.

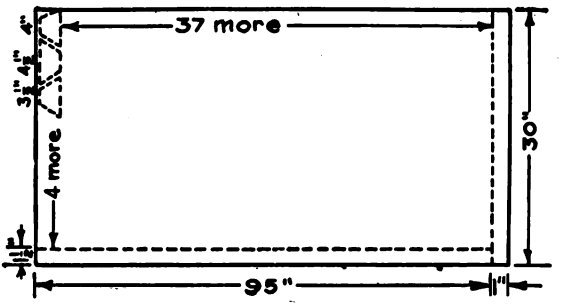

FIG. 38.

Ans. 266 end blanks.

Number of blanks from width of sheet 7
" " " " length " " 38

Total number of blanks $38 \times 7 =$ 266

Example of Problem 4F.

One piece $95'' \times 1\frac{1}{2}'' = 142\frac{1}{2}$ sq. in.
" " $30'' \times 1'' = 30$ " "

Total waste $172\frac{1}{2}$ sq. in. *Ans.* $172\frac{1}{2}$ sq. in., waste from end.

Example of Problem 4G.

The end blank is in the form of a trapezoid, the area of which is equal to one-half the sum of the upper and lower bases multiplied by the altitude. In this example the lower base is $4\frac{1}{2}''$, the upper base $3\frac{1}{2}''$, and the altitude $2\frac{1}{2}''$.

$4\frac{1}{2}'' + 3\frac{1}{2}'' = 8''$, sum of lower and upper bases;
$8'' \div 2 = 4''$, half of the sum of the bases;
$4'' \times 2\frac{1}{2}'' = 10$ sq. in., area of trapezoid.

(No. of end blanks) 266 | 172.50 (area of waste) | .64 sq. in., waste per blank.
159 6
12 90
10 64

(No. of blanks) 266 | 640 (waste per blank) | .002
532

Ans. (*a*) 10 sq. in.
(*b*) $\frac{2}{10}\%$ waste.

Digitized by Google

Example of Problem 4H.

Area of one body blank 66.93 sq. in.
Area of 1000 body blanks 66930 sq. in.

464.8 area in sq. ft. (approx.)

Sq. in. in one sq. ft. 144 | 66930
576
933
864
690
576
1140
1152

464.8 area in sq. ft.
1.017 correction for 1.7% waste.

32536
4648
46480

472.7016 corrected area.

472.70 area in sq. ft.
.625 wt. per sq. ft.

236350
94540
273620

285.43750 lb. wt. of 1000 body blanks.

Area of one end blank 10 sq. in.
Area of 2000 end blanks 20,000 sq. in.

138.88 area in sq. ft. (approx.)

144 | 20000.00
144
560
432
1280
1152
1280
1152
1280
1152

Ans. (*a*) 285.43 pounds.
(*b*) 86.96 pounds.
(*c*) 372.39 pounds.

Digitized by Google

138.88 area
1.002 correction for $\frac{2}{10}$% waste.

27776
1388800

139.15776 sq. ft. corrected area.

139.15 area
.625

69375
27830
83490

86.96875 lb., wt. of 2000 end blanks.

285.43 corrected wt. of 1000 bodies
86.96 " " of 2000 ends

372.39 weight of 1000 pans.

Digitized by Google

Digitized by Google

CHAPTER II

WIRED CYLINDERS

Prob. No.	JOB	DRAWING OBJECTIVE	MATHEMATICAL OBJECTIVE
5.	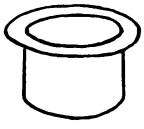 CHIMNEY CAP	Idea of front elevation of a cylinder. Idea of envelope of cylinder. Standard lock	Circumference of a circle. Lateral area of cylinder.
6.	½ PINT CUP	Notching body pattern. Burr on bottom.	Area of circle.
7.	2 QT. PAINTER'S PAIL 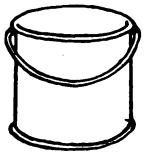	Double seaming bottom. Wire bail.	Cu. inches in a gallon. Computing volume of cylinder. Contents in parts of a gallon.
8	GARBAGE CAN (No cover) 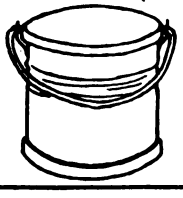	Beading can. Bail ears and bail.	Computing unknown dimensions, other dimensions being given.

Objectives of Problems on Wired Cylinders.

Digitized by Google

Problem 5

GALVANIZED CHIMNEY TUBE

17. The Chimney Tube.—In the problem of the chimney tube, Fig. 39, the student will get a clear understanding of the idea of unrolling the envelope of an object to get the pattern.

A chimney tube is a short piece of pipe intended to be built into a chimney. If the tube is held on a level with the eye, the sides, the top, and the bottom will appear as four straight lines. The elevation of Fig. 40 shows this view. It is impossible to tell whether this elevation represents a flat or a curved surface unless another view is drawn. For this reason a profile should be drawn. This profile will show that the elevation is that of a cylinder. Extension lines are used to locate this profile properly, Fig. 41. Three dimensions are given in the elevation. The elevation shows a $\frac{3}{8}$-inch flange on the top end of the tube. It is unnecessary to draw this flange in the profile.

Figure 43 represents a cylinder placed on its side. The profile appears on the left-hand end. Straight lines are drawn on the body from each division of the profile, parallel to the sides of the cylinder. If each line left a mark as the cylinder was rolled along a flat surface, we would obtain the stretchout as shown. The lines running from the top to the bottom are the measuring lines of the stretchout, since upon these lines any point on the surface of the cylinder can be measured (located). This illustration also makes plain the reason for drawing the line of stretchout at right angles to the view from which the pattern is to be taken.

The profile, Fig. 41, is divided and the divisions numbered as shown. The line of stretchout should be drawn and the spacing of the profile transferred to this line. The numbers should correspond. It should be remembered that it is necessary to start with the number of the profile at which the seam is to occur in the finished article. Perpendicular lines should be erected at points 1 and 1 of the stretchout. Extension lines drawn from the elevation complete the stretchout. A $\frac{3}{8}$-inch edge is added to allow for the flange called for in the elevation. On the right and left edges of the stretchout, $\frac{1}{2}$-inch edges for locks are added. These locks must be turned in the stove-pipe folder. The top of each lock is notched to reduce the thickness of the seam on the flanged end.

Digitized by Google

FIG. 39

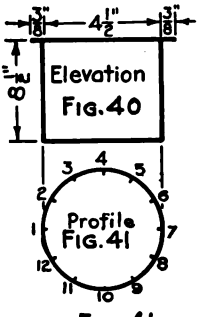

FIG. 41

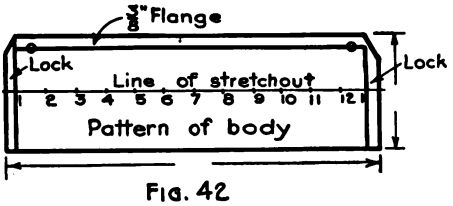

FIG. 42

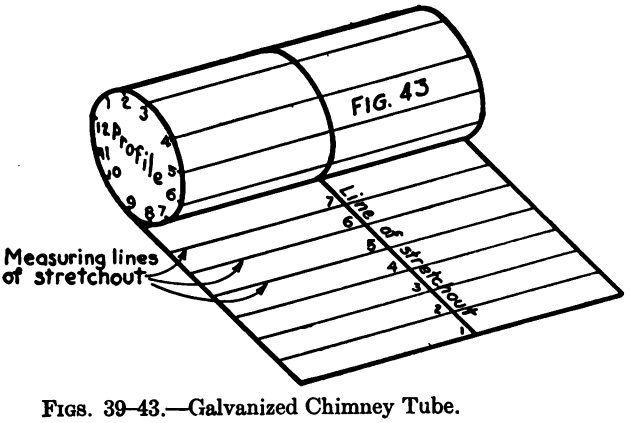

FIGS. 39–43.—Galvanized Chimney Tube.

Digitized by Google

18. Related Mathematics on Chimney Tube.—*Circumference of a Circle.*—A circle is a portion of a flat surface bounded by a curved line, every point in which is the same distance from a point within, called the center. The *circumference* is simply the curved line that is drawn with the compass. The diameter of a circle is any straight line that passes through the center of the circle and has its ends in the circumference. It is possible to draw any number of diameters in the same circle, but they will all have the same length.

Value of π.—The *girth* or distance around a cylinder can be found by wrapping a narrow strip of newspaper around it. The point where the strip overlaps the end should be marked before the paper is removed from the cylinder. The distance from the end of the paper to the mark will give the distance around the cylinder, or the *girth.*

If the diameter of the cylinder be accurately measured and the circumference or girth divided by the diameter, the answer will be about $3\frac{1}{7}$. Regardless of the size of the cylinder this experiment will always produce the same result. Mathematicians have proved that the exact relation of circumference to diameter cannot be found. The value 3.1416 is near enough for most purposes. Some sheet metal workers use $3\frac{1}{7}''$ or $\frac{22}{7}$ in their computations. This relation between circumference and diameter is indicated by the Greek letter π (pronounced pi).

Suppose it is desired to find the circumference of a 7″ circle: $7'' \times \frac{22}{7} = \frac{154}{7} = 22''$, or $7'' \times 3.1416 = 21.9912''$. If the circumference is given and the diameter is wanted, the process is reversed; i. e., with a circumference of 26″, $26'' \div \frac{22}{7} = 26'' \times \frac{7}{22} = 8\frac{3}{11}''$; or $26'' \div 3.1416 = 8.2442''$.

Lateral Area of a Cylinder.—Lateral means pertaining to the side. Lateral area is the area of the side wall of a cylinder. The pattern of the side wall of a cylinder is a rectangle whose length is equal to the circumference of the profile, and whose height is the height of the cylinder. The area of the pattern is equal to the length times the height; therefore, the lateral area of any cylinder must be equal to the circumference of the base times the height.

Problem 5A.—Compute the circumference of the chimney tube, Fig. 42, and compare the answer to the length of the line of stretchout between points 1 and 1. These should agree or a mistake has been made.

Digitized by Google

Problem 5B.—Compute the lateral area of the cylinder shown in Fig. 42, without the locks and flange.

Problem 5C.—Compute the area of the pattern with locks and flange added, Fig. 42.

Note.—The lateral area of a cylinder does not include any locks, laps, or flanges, and in order to arrive at the cost of material these must be added to the lateral area.

Digitized by Google

Problem 6

HALF-PINT CUP

19. The Half-pint Cup.—This problem is intended to bring out the method of notching employed when a wire is rolled into a cylinder, to describe the standard "tin lock," and to show how a bottom is snapped on.

In drawing the elevation of the half-pint cup, special attention should be given to the following items: The lines representing the wire must be $\frac{3}{16}$ in. apart. The lines at the bottom must be $\frac{1}{8}$ in. apart. The handle must be drawn according to the dimensions given in Fig. 49. The profile is located by dropping extension lines from the elevation. At a distance of $1\frac{3}{4}$ in. from the lower line of the elevation, the horizontal center line of the profile should be drawn. The extension lines dropped from the elevation should intersect the center line, thereby setting off the horizontal diameter of the profile. The profile is drawn with the compass after the center of this diameter is located. The handle of the cup is shown attached to the profile, but it is not essential that this be drawn, since the pattern of the handle is a regular taper from a width of $\frac{1}{2}$ in. at the top to $\frac{1}{4}$ in. at the lower end.

The profile is divided into equal spaces and each division numbered. After the line of stretchout is drawn, the spacing of the profile is transferred to this line and the divisions numbered to correspond. At the points 1 and 1 of the line of stretchout perpendicular lines are erected. The stretchout is finished by extension lines carried over from the elevation. The wire edge which must be computed is added to the top edge of the stretchout. A $\frac{1}{4}$-inch edge is added to each side for a standard "tin lock." Since a lock has three thicknesses the full allowance is never turned. For a tin lock $\frac{5}{32}$ in. must be turned in a bar folder. The notching of the wire edge in Figs. 50 and 51 never goes in as far as the circumference line, and always goes down below the top line of the stretchout a distance equal to the diameter of the wire. This notch removes the thick seam on the body at the point where the wire crosses. The bottom of the lock is notched as shown in Fig. 51.

The pattern of the bottom of the cup is drawn by first reproducing the profile and adding a $\frac{1}{8}$-inch edge all around. This edge

Digitized by Google

FIG. 44

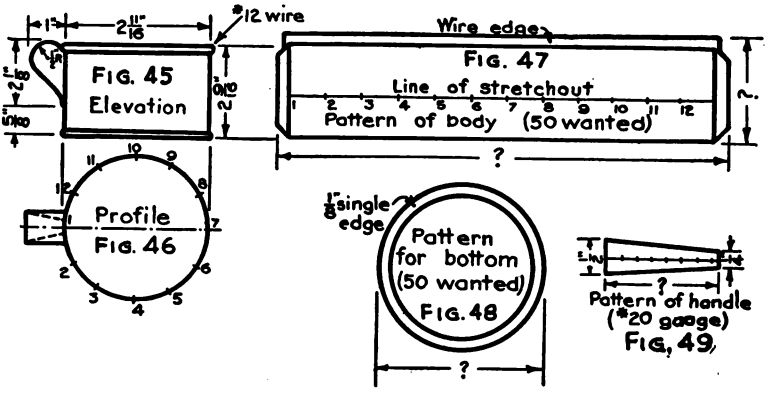

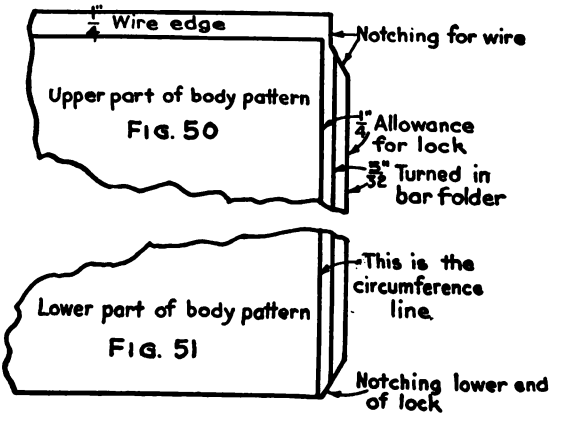

FIGS. 44–51.—Half-pint Cup.

Digitized by Google

is turned up in the "thin edge" and is "snapped on" over the lower edge of the body. The profile of the handle is shown in elevation. This profile is divided into equal spaces. This spacing is transferred to any straight line and perpendiculars erected at the first and last points. Using the line of stretchout as a center line, $\frac{1}{4}$ in. is set off on each side for the width of the top and $\frac{1}{8}$ in. on each side for the width of the bottom. The pattern of the handle is completed by connecting these points with straight lines. The handle is intended to be made from No. 20 gage iron, tinned. Should the handle be made from lighter material, it would be necessary to add a hem to the long sides of the pattern in order to gain the necessary rigidity.

20. Related Mathematics on Half-pint Cup.—*Problem 6A.*—How many sheets of tin plate measuring 20″ × 28″ would be required to make fifty half-pint cups? Treat the bottom of the cup as a square piece of metal.

Problem 6B.—What would be the percentage of waste for the entire job?

Problem 6C.—20″ × 28″ IX "Charcoal Tin, Bright" is packed by the manufacturers in boxes containing 112 sheets. If this grade of tin plate is selling for $26 per box, how much will the tin required for fifty half-pint cups (Problem 6A) cost?

Area of a Circle.—The method of calculating the area of a circle will be thoroughly understood by the student if he will go through the following exercise:

Draw a 5″ square. Draw straight lines connecting opposite corners of this square. These lines are called the diagonals of the square. The diagonals of a square, or rectangle, always divide each other into two equal parts. Using the point where the diagonals cross each other (intersect) as a center, draw a circle that will just touch the center of each side of the square. What is the diameter of this circle? How does this diameter compare with the length of the sides of the square? You have drawn what is known as an inscribed circle; that is, a circle whose circumference touches all sides of the containing figure but does not pass beyond the sides. What is the area of this square? Would you get the same answer if you simply multiplied the diameter by itself? This operation is known as "squaring the diameter" and is always written D^2. Look up a table of areas of circles and you will find the area of a 5″ circle given as 19.635″. Now, divide the

Digitized by Google

area of the 5″ circle by the area of the 5″ square. Is your answer .7854? If you should try this experiment with a circle of any diameter you would get the same result. Therefore, by squaring the diameter of any circle and multiplying by .7854, you can find its area. You will often see this rule written $A = D^2 \times .7854$. Does the method of arriving at this result resemble the one employed in establishing the rule for finding the circumference of a circle? In each case did we divide one quantity by another? Dividing one quantity by another establishes a comparison of the size of one to the size or the other. This comparison is called a *ratio*. For instance, the ratio of the foot to the inch is 12, and is found by dividing the foot by the number of inches in a foot. What is the ratio of the yard to the foot?

Problem 6D.—What is the area of the pattern for the bottom of the half-pint cup, Fig. 48. Compute the area of a 7″ circle. Compute the area of an 8″ circle. Compute the area of a $9\frac{1}{2}$″ circle.

Digitized by Google

Problem 7

PAINTER'S PAIL

21. The Painter's Pail.—The Painter's Pail, Fig. 52, is generally made of No. 28 Black Iron. The bottom of the pail is double seamed but it is not soldered. The wire bail is formed with a hook on each end. These hooks are inserted in holes punched through the sides of the pail.

A full size elevation, using the dimensions given in Fig. 53, should first be drawn and dimensioned. The lines representing the wire at the top of the pail should be slightly more than $\frac{1}{8}$ in. apart. Two lines at the bottom represent the double seam and should be $\frac{5}{32}$ in. apart. The upper left-hand corner of the elevation should be "broken" in order to determine accurately the profile of the "hook" on the end of the bail. Extension lines drawn downward from the elevation locate the profile, Fig. 56. The horizontal center line of the profile should be drawn at a distance of three inches from the elevation. By means of the "T-square" and triangle a vertical center line of the profile is put in. The profile is then completed. The center lines will indicate four points on the circumference. These points are to be numbered 1, 5, 9, and 13 as shown. In order to divide the circumference into sixteen equal parts, as indicated, the student should proceed as follows:

With points 1 and 5 as centers, draw two arcs that cross each other as at *A*. You may use any radius in drawing these arcs. Carefully connect point *A* with the center of the profile by a straight line. This line will divide that part of the profile between points 1 and 5 into two equal parts. Number this center point 3. With points 1 and 3 as centers repeat this operation, thereby obtaining point 2. The space between points 1 and 2 may be used to divide the profile into sixteen equal parts.

The straight line from point *A* to the center of the profile also divides the angle formed by the horizontal and vertical center lines into two equal parts. The angles shown in Fig. 54 are to be bisected. Since these angles have no arc shown, it will be necessary to draw one. The corner (vertex) of the angle should be used as a center. The radius should be as large as possible and yet have the arc cut the sides of the angle. This arc will give

Digitized by Google

points corresponding to points 1 and 5 of the profile. These points are to be used as centers from which to draw the intersecting arcs.

The line of stretchout, Fig. 55, can now be drawn and the entire

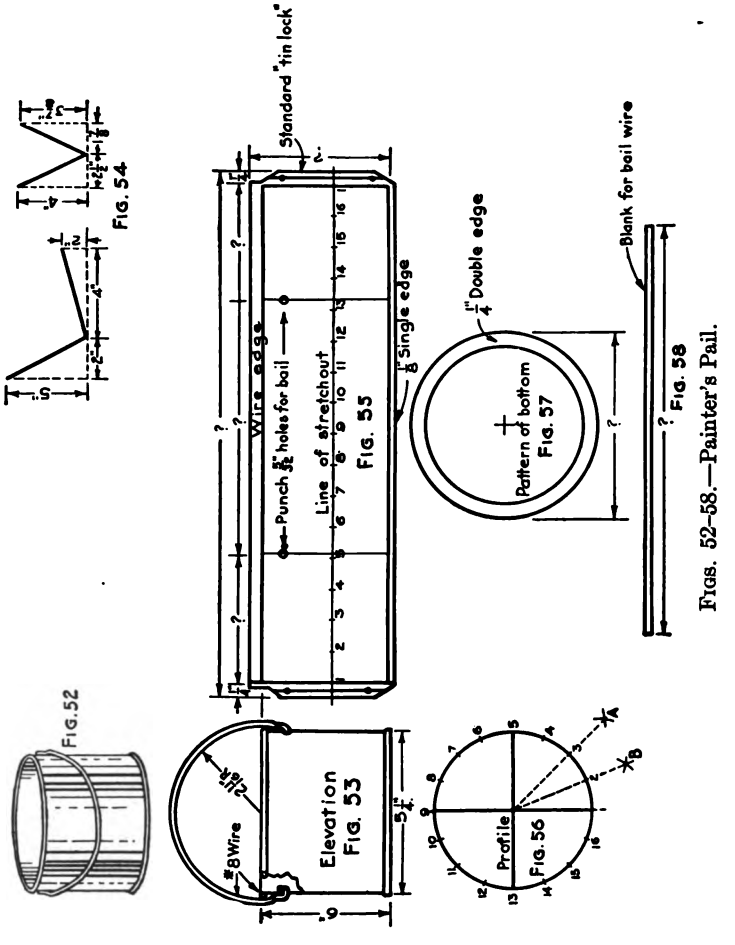

FIGS. 52–58.—Painter's Pail.

stretchout developed. A standard tin lock is added to each side of the stretchout. Why does the stretchout start with point 1? Why do the holes for the bail occur on lines 5 and 13? A $\frac{1}{8}$-inch single edge is added to the bottom of the stretchout. The pattern for the bottom, Fig. 57, may be drawn by reproducing the profile

Digitized by Google

and adding a $\frac{1}{4}$-inch double edge all around. The double seam on this pail is of the same construction as the one shown in Fig. 36. The wire edge is added to the top of the stretchout. Using the bail shown in the elevation as a profile, the stretchout for the wire blank, Fig. 58, can be determined in the usual manner.

22. Related Mathematics on Painter's Pail.—*Volume of a Cylinder.*—The volume of a cube is equal to the length of the base, times the width of the base, times the height of the cube. This is written $V=L\times W\times H$. It has also been found that length times width gives the area. Because of this it can be said that volume equals area times height, and that the volume of a cylinder is equal to the area of the base times the height. The base of a cylinder is a circle, the area of which equals $D^2\times .7854$. Therefore, for a cylinder, Volume equals Diameter squared times .7854 times the height, or $V=D^2\times .7854\times H$.

Sample Problem.—Find the volume of a cylinder 4″ in diameter and 6″ high.

$$V=D^2\times .7854\times H$$
$$V=4^2\times .7854\times 6$$
$$V=16\times .7854\times 6$$
$$V=75 \text{ cu. in.} \qquad \textit{Ans.}\ 75 \text{ cu. in.}$$

Problem 7A.—Compute the volume of the Painter's Pail, Figs. 52 and 53.

Cubic Inches in One Gallon.—It is established by law that one gallon of liquid measure shall contain 231 cubic inches.

Problem 7B.—How many cubic inches are there in one quart? In one pint?

Problem 7C.—What is the exact capacity of the pail, Fig. 53, in quarts and fractional parts of a quart?

Problem 7D.—If a job called for a pail 8″ in diameter and $7\frac{1}{4}$″ high, what would be its exact capacity in quarts?

Digitized by Google

Problem 8

GARBAGE CAN

23. The Garbage Can.—In developing the patterns for large objects such as a garbage can, Fig. 59, it is necessary to make the drawings to scale. Drawing to scale means making each line on the drawing one-half, one-third, one-quarter, or other fractional part of its true length. Scale rules are provided to assist the draftsman in this work. In order to understand the principles of the scale rule, the student should construct a model of one according to the following directions:

Suppose we wish to make a drawing to a scale of three inches to the foot (3″ = 1′0″). This would call for the use of a rule having a three-inch scale. We will proceed to construct such a scale. Procure a strip of thin cardboard twelve inches long and one inch wide. Lay off along one edge spaces three inches apart. Each of these spaces will represent twelve inches on the finished article. How many feet of the finished product are represented by the entire rule? Mark these divisions 0, 1, 2, and 3. Divide the first space into twelve equal parts. Each new space represents one inch. Mark the third, sixth, and ninth spaces as shown. Each space representing one inch can now be divided into four, eight, or sixteen equal parts, in order to represent $\frac{1}{4}$ in., $\frac{1}{8}$ in., or $\frac{1}{16}$ in. respectively. The rule shown in Fig. 60 is measuring a distance of three feet, four inches (3′-4″). Notice that the feet are read to the right of the zero mark and the inches to the left of the zero mark.

The elevation of the garbage can, Fig. 61, should be drawn according to the dimensions shown. This elevation shows two O-G beads on the body of the pail. The size of these beads is not given, because the equipment of beading rolls varies with different shops. The necessary rigidity will be obtained regardless of the size of bead used. Bail ears are used on this job. The student's attention is called to the location of these ears. This can is designed for a cover that has a rim fitting inside of the body. If the cover rim were fitted over the outside, the ears would have to be placed below the bead and the bail lengthened to correspond. The development of the patterns is similar to the preceding problem and needs no additional description. All dimensions on the elevation and the patterns should be *full size.* These are

Digitized by Google

known as *Witness Dimensions*, and the workman always follows these while manufacturing from scale drawings. The use of witness dimensions relieves the workman from responsibility for errors, transferring this responsibility to the draftsman or designer.

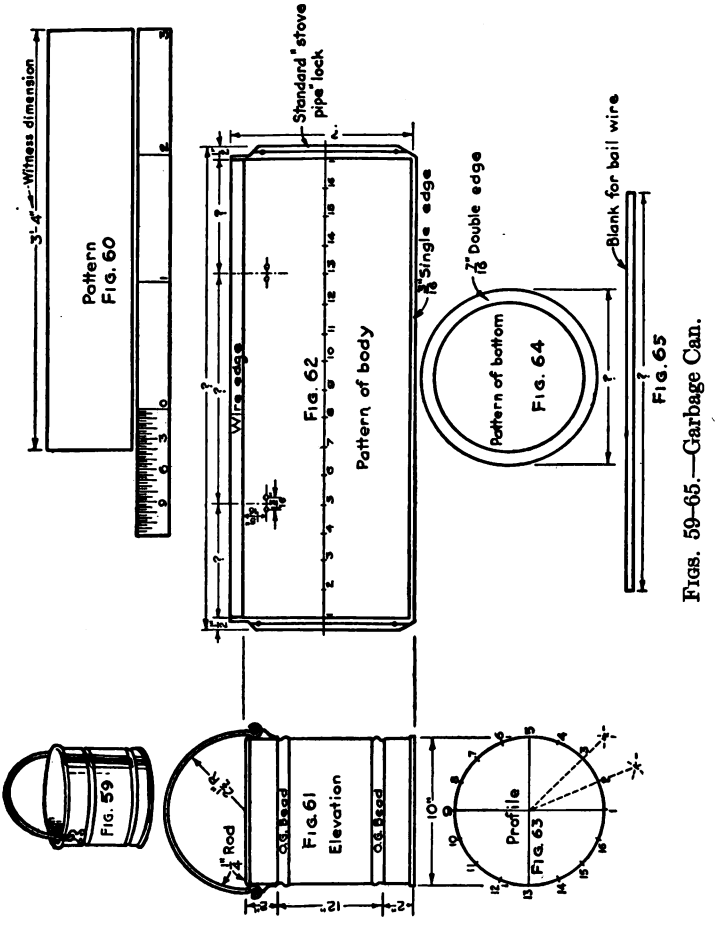

FIGS. 59–65.—Garbage Can.

24. Related Mathematics on Garbage Can.—*Problem 8A.*—Compute the exact capacity of the garbage can, Fig. 61, in gallons.

Transposing a Formula.—Very often a customer requires a certain capacity in a vessel but does not care about the dimensions. In the example of Article 22 the diameter and the height

Digitized by Google

were given and the formula $V = A \times H$ was used. If the volume and the height were given, to find the area the volume would be divided by the height. If the volume and the area were given, to find the height the volume would be divided by the area. If the volume and the diameter were given, the preceding formula would be used first, finding the area corresponding to the given diameter.

(*a*) Volume = Area $\times$ Height
$V = A \times H$

(*b*) Area = Volume $\div$ Height
$A = V \div H$

(*c*) Height = Volume $\div$ Area
$H = V \div A$

Formula (*a*) is the original, or basic, formula while (*b*) and (*c*) are obtained by changing the position of certain quantities.

What happens to the multiplication sign when area is carried over to the left-hand side in place of volume? Does the same thing happen when height and volume are interchanged? This process of changing the location of the terms in a formula is called *transposing the formula.* When any terms are transposed, the sign must also be changed to the opposite; that is, multiplication becomes division, addition becomes subtraction, and so on.

Problem 8B.—What is the area of the bottom of a garbage can 16″ high, the volume of which is 42 qts.?

Finding the Diameter of a Circle from the Area.—The formula for the area of the base of a cylinder is $A = D^2 \times .7854$. Problem 8B gives the area of the bottom of the can. Before the bottom can be made, its diameter must be found. There are two ways of doing this: by using printed tables giving this information; or by transposing the formula for area and finding the diameter by square root. A sheet metal worker must know how to find the square root; consequently, the student is advised to become familiar with this process.

Original formula $\quad \text{Area} = D^2 \times .7854$
Transposing; $\quad D^2 = \text{Area} \div .7854$
(*d*) Extracting square root, $\quad D = \sqrt{\text{Area} \div .7854}$

Digitized by Google

Problem 8C.—What is the diameter of the can mentioned in Problem 8B?

Illustrative Examples

Example of Problem 8B.

What is the area of the bottom of a can 12″ high holding 20 qts.?

20 qt. = 5 gal. (volume)

5 × 231 = 1155 cu. in. (volume)

Formula (*b*) would apply here, Area = Volume ÷ Height

Substituting known values, Area = 1155 cu. in. ÷ 12″

12 | 1155.00 | 96.25 sq. in.

Ans. 96.25 sq. in.

Example of Problem 8C.

What is the diameter of the bottom of the can mentioned in the preceding example?

Formula (*d*) would apply Diameter = $\sqrt{\text{Area} \div .7854}$

Substituting, Diameter = $\sqrt{96.25 \div .7854}$

.7854 | 96.250000 | 122.54 sq. in.

78 54

17710

15708

20020

15708

43120

39270

38500

31416

Extracting square root., $\sqrt{122.54}$ | 11.0

1

21 | 022

21

220 | 154

Ans. 11″, diameter.

Digitized by Google

CHAPTER III

CYLINDERS CUT BY PLANES

Prob. No.	JOB	DRAWING OBJECTIVE	MATHEMATICAL OBJECTIVE
9	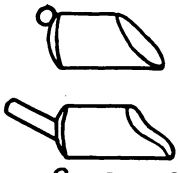 SCOOPS	Idea of cylinder cut by a plane. Cylindrical handle. Tapering handle.	Estimating cost.
10 & 11	CONDUCTOR PIPE ELBOWS	Methods of construction. Standard cuts of pipe.	Estimating cost.
12	STOVE PIPE ELBOWS.	Methods of construction. Standard cuts of pipe.	Estimating weight and cost.
13 & 14	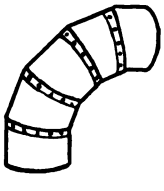	Riveting the elbow. Center line radius. The backset method.	Figuring center line radius. Weight of elbow.

Objectives of Problems on Cylinders Cut by Planes.

Digitized by Google

Problem 9

THE SCOOP

25. The Scoop.—Figure 66 shows an ordinary flour or sugar scoop. Briefly described, any scoop is a cylinder cut off at an angle. A head is soldered in, and a handle is attached to the head. Figure 72 shows another type of scoop, the body being cut by a curved plane and a cylindrical handle being attached to the head.

The elevation should be drawn, using the dimensions given in Fig. 66. It is not necessary to show the handle in the elevation. After the profile, Fig. 67, has been drawn, it should be divided into twelve equal spaces. Extension lines from each division of the profile should be carried through the elevation, Fig. 68, until they meet the miter line.

Definition of a Miter Line.—The miter line is the line of junction between two shapes; these shapes may be alike or unlike. The miter line of the scoop is the line of junction between the body of the scoop and an imaginary cutting plane.

The line of stretchout is drawn at right angles to the elevation. The spacing of the profile must then be transferred to the line of stretchout and numbered to correspond. The measuring lines are now drawn in. The extension lines from the profile meet the miter line at seven points as shown. From each of the seven points of intersection on the miter line a dotted extension line is carried over into the stretchout. These extension lines must be drawn parallel to the line of stretchout. Starting from point 1 of the profile, follow the extension line until it meets the miter line, and from there follow the dotted line until it meets lines 1 and 1 of the stretchout. Small circles are placed where the dotted line crosses the measuring lines No. 1 of the stretchout in order to mark them definitely. In like manner every point of the profile can be located in its proper position in the stretchout. A curved line drawn through these points will give the miter cut of the pattern. A standard tin lock is added to each side as shown. Over-all dimensions should be placed on the pattern as shown. The pattern for the head can be obtained by reproducing the profile and adding a $\frac{1}{8}$-inch burr. It is not necessary to allow for the dish of the head because it is so slight.

Up to this point the discussion applies to both types of scoop,

Digitized by Google

Figs. 66 and 72. It should be noticed in drawing Fig. 68, that points 2 and 12, 3 and 11, 4 and 10, 5 and 9, and 6 and 8 fall on

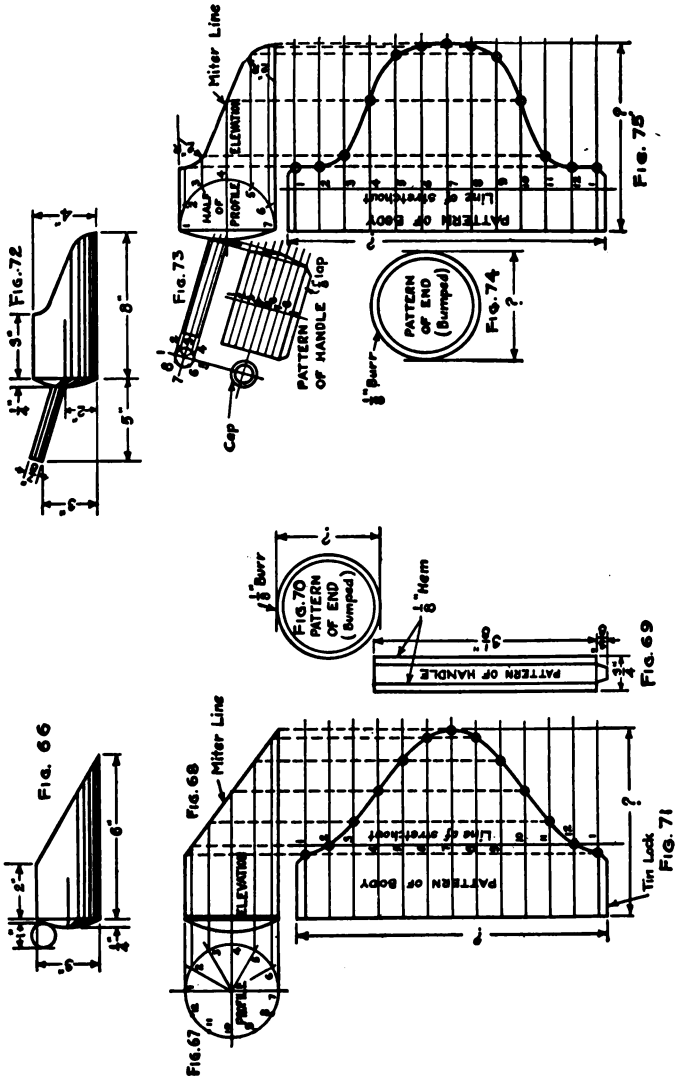

Figs. 66–75.—Scoops.

the same extension lines. In view of this fact, many draftsmen save time by drawing a half-profile as shown in the elevation of Fig. 73.

Digitized by Google

The pattern of the handle, Fig. 69, is a straight piece of metal $\frac{3}{4}$ in. wide and 3.1416 in. long. Hems are turned on the long side, and a $\frac{3}{8}$-inch lap added for joining the ends when the piece is "formed up." The handle for the scoop shown in Fig. 73 is developed by the same method that was used for the body. This is not an exact pattern, due to the double curvature, but is near enough for practical purposes on small work. The cap for the handle is made by a $1\frac{1}{8}$-inch hollow punch on a lead piece. By driving the punch and "punching" into the lead piece, a burr is formed on the cap.

Digitized by Google

Problem 10

TWO-PIECE ELBOW

26. The Two-piece Elbow.—A model of a two-piece elbow, Fig. 76, can be constructed from a cylindrical piece of wood such as a broom handle. The handle should be cut through at an angle and the two pieces put together so that they will form an angle similar to that shown in the elevation of Fig. 77. It should be noticed that the cut portions are not circles but that the section is longer in one direction than in the other. The two pieces fit together perfectly to form an elbow.

The following facts concerning all elbows are illustrated in Fig. 77. They should be memorized by the student.

The Base Line.—Every elbow is represented as starting from a horizontal line. This line is called the base line of the elbow.

Arcs of the Elbow.—Every elbow is made *around* the arcs of two circles. These arcs have the same center.

Center of the Elbow.—The center of the arcs around which the elbow is made is also the center of the elbow.

Throat of the Elbow.—That part of the elbow drawn around the smaller arc is the throat of the elbow, and the arc is the arc of the throat.

Back of the Elbow.—That part of the elbow made around the larger arc is the back of the elbow, and the arc is the arc of the back.

Throat Radius.—The throat radius is the distance measured along the base line, from the center of the elbow to the throat.

Center Line Radius.—The center line radius is the distance, measured along the base line, from the center of the elbow to the center line of the big end.

The Backset of an Elbow.—The backset is the amount the back rises (sets) above the throat. This vertical distance is indicated by the dash line drawn horizontally from the highest point of the throat of the big end.

Number of Backsets.—The first piece of an elbow has one backset, the last piece has one, and every other piece in the elbow has two backsets.

Rule for the Number of Backsets.—The number of backsets is equal to the number of pieces in the elbow less one, multiplied by two. A four-piece elbow would have $(4-1) \times 2=6$ backsets.

Digitized by Google

Big End of an Elbow.—The big end is the piece that starts at the base line. Its "cut" is equal to the diameter of the elbow $\times \pi$, plus the necessary allowance for locks or laps. The big end cut of a 7-inch elbow would be $(7 \times \pi) + 1 = 22.991$ in. (or 23 in.)

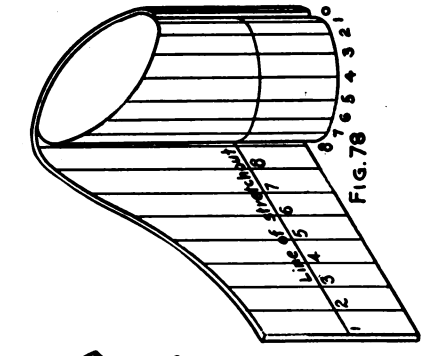

FIG. 78

FIG. 76

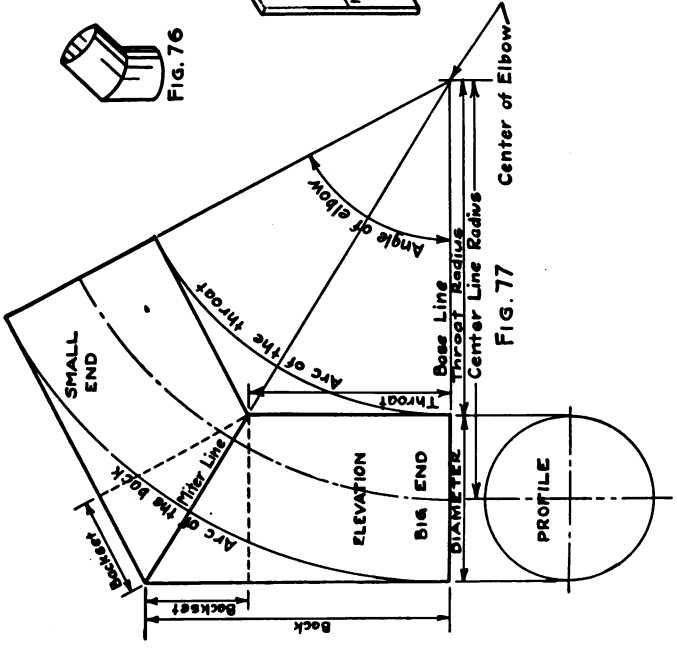

FIG. 77

FIGS. 76–78.—Two-piece Elbow.

Small End of an Elbow.—The small end is the last piece of an elbow. Its "cut" is found by subtracting seven times the thickness of the metal used from the big end cut. Thus the small end

Digitized by Google

cut of a 7-inch elbow made from No. 24 U. S. S. Gage would be $22.991-(.025\times7)=22.991-.175=22.816$ in. ($22\frac{13}{16}$ in.)

Angle of an Elbow.—The angle of an elbow is a measure of the opening formed by two straight lines drawn from the center of the elbow to the extremities (ends) of the arc of the back.

Miter Lines of an Elbow.—The miter lines are the lines of junction between the pieces of the elbow. All miter lines must meet at the center of the elbow.

The student is required to make a drawing similar to Fig. 77 and to name all the parts defined above. The profile should be made about four inches in diameter but the size of the drawing is left to the student's discretion.

Digitized by Google

[illegible]

[illegible] OF ELBOW

27. The [illegible] Elbow.—Figure 79 shows the ele[illegible]on [illegible] radius of 3 in. to fi[illegible]ver [illegible] made of No. 24 galva[illegible]ed [illegible] drawing a base line $7\frac{1}{2}$ in. [illegible]ng. [illegible] equal in length to the sum [illegible] the [illegible] radius. Using this base li[illegible] as [illegible] off. A distance equal t[illegible] the [illegible] the vertex (point) of the a[illegible]gle. The [illegible] are drawn, using the vertex of the angle [illegible] backsets in the elbow is equa[illegible] to [illegible] elbow it will be $(2-1)\times 2=2$ backsets. [illegible] is divided into as many equal spaces [illegible] backsets in the elbow; in this case, two equal [illegible] drawn from the center of the elbow [illegible] of the arc, above the base line. Perpendicular [illegible] angles to the base line are erected [illegible] diameter of the big end. These perpendiculars [illegible] Straight lines drawn from these [illegible] of the arcs complete the elevation [illegible]

After [illegible] is drawn, it should be divided into sixteen [illegible] and extension lines carried from each division up to [illegible] of the elevation. The line of stretchout, Fig. [illegible] The divisions of the profile are transferred to [illegible] and numbered to correspond. Number 1 [illegible] so placed that it will bring the seam of the [illegible] The measuring lines of the stretchout are [illegible] lines from the intersections of the miter line [illegible] stretchout. Each extension line should be [illegible] starting point in the profile, up to the miter line of [illegible] and thence to a correspondingly numbered line of [illegible] A small circle marks each intersection thus [illegible] A curved line drawn through these intersections will [illegible] of the first piece (big end) of the elbow. An [illegible] the base line of the elbow carried over into the [illegible] the pattern for the big end. Lines 1 and 1

Digitized by Google

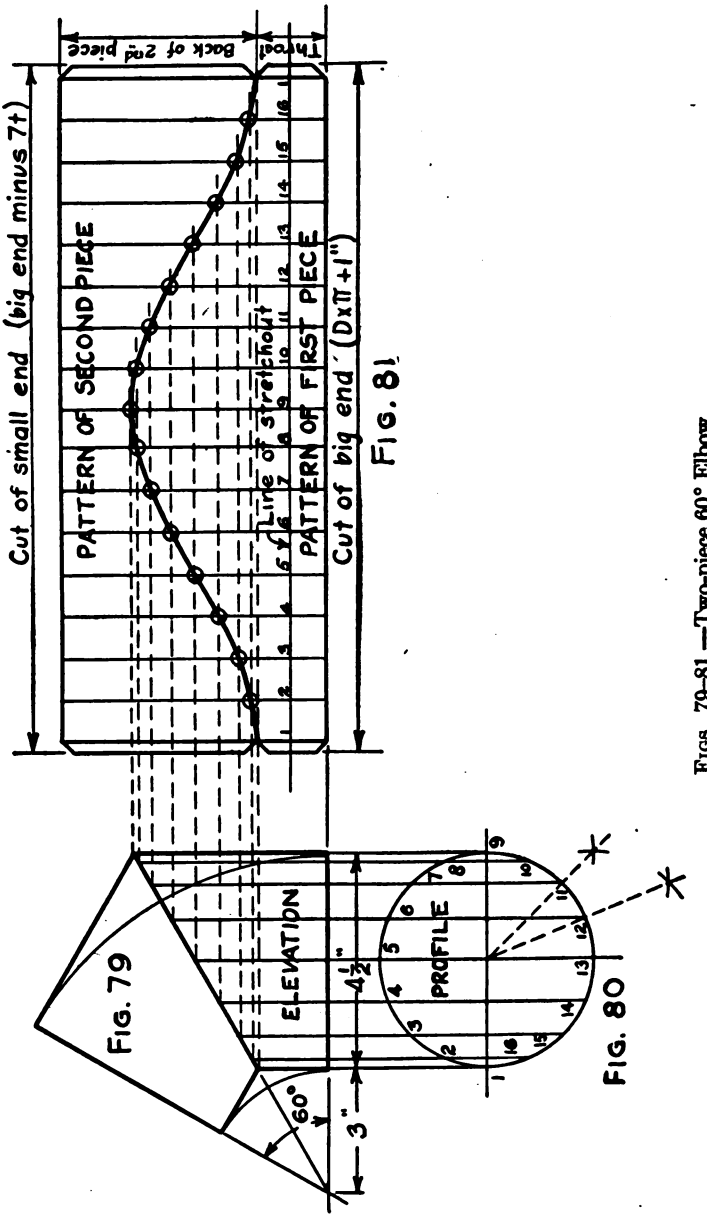

FIGS. 79–81.—Two-piece 60° Elbow.

Digitized by Google

Problem 11

TWO-PIECE 60° ELBOW

27. The Two-piece 60° Elbow.—Figure 79 shows the elevation of a two-piece 60° elbow having a throat radius of 3 in. to fit over a pipe 4½ in. in diameter, and to be made of No. 24 galvanized steel. The elevation is started by drawing a base line 7½ in. long. The base line of an elbow is always equal in length to the sum of the diameter of the elbow and the throat radius. Using this base line as one side, an angle of 60° must be laid off. A distance equal to the throat radius (3 in.) is set off from the vertex (point) of the angle. The arcs of the throat and back are drawn, using the vertex of the angle as a center. The number of backsets in the elbow is equal to (No. of pieces−1)×2. For this elbow it will be (2−1)×2=2 backsets. The arc of the back is divided into as many equal spaces as there are backsets in the elbow; in this case, two equal parts. The miter line is drawn from the center of the elbow through the first division of the arc, above the base line. Perpendiculars (lines drawn at right angles) to the base line are erected from each end of the diameter of the big end. These perpendiculars must stop at the miter line. Straight lines drawn from these intersections to the extremities of the arcs complete the elevation of the small end.

After the profile, Fig. 80, is drawn, it should be divided into sixteen equal parts, and extension lines carried from each division up to the miter line of the elevation. The line of stretchout, Fig. 81, is next drawn. The divisions of the profile are transferred to the line of stretchout and numbered to correspond. Number 1 of the profile must be so placed that it will bring the seam of the big end in the throat. The measuring lines of the stretchout are drawn and extension lines from the intersections of the miter line carried over into the stretchout. Each extension line should be traced from its starting point in the profile, up to the miter line of the elevation, and thence to a correspondingly numbered line of the stretchout. A small circle marks each intersection thus obtained. A curved line drawn through these intersections will be the miter cut of the first piece (big end) of the elbow. An extension line from the base line of the elbow carried over into the stretchout completes the pattern for the big end. Lines 1 and 1

Digitized by Google

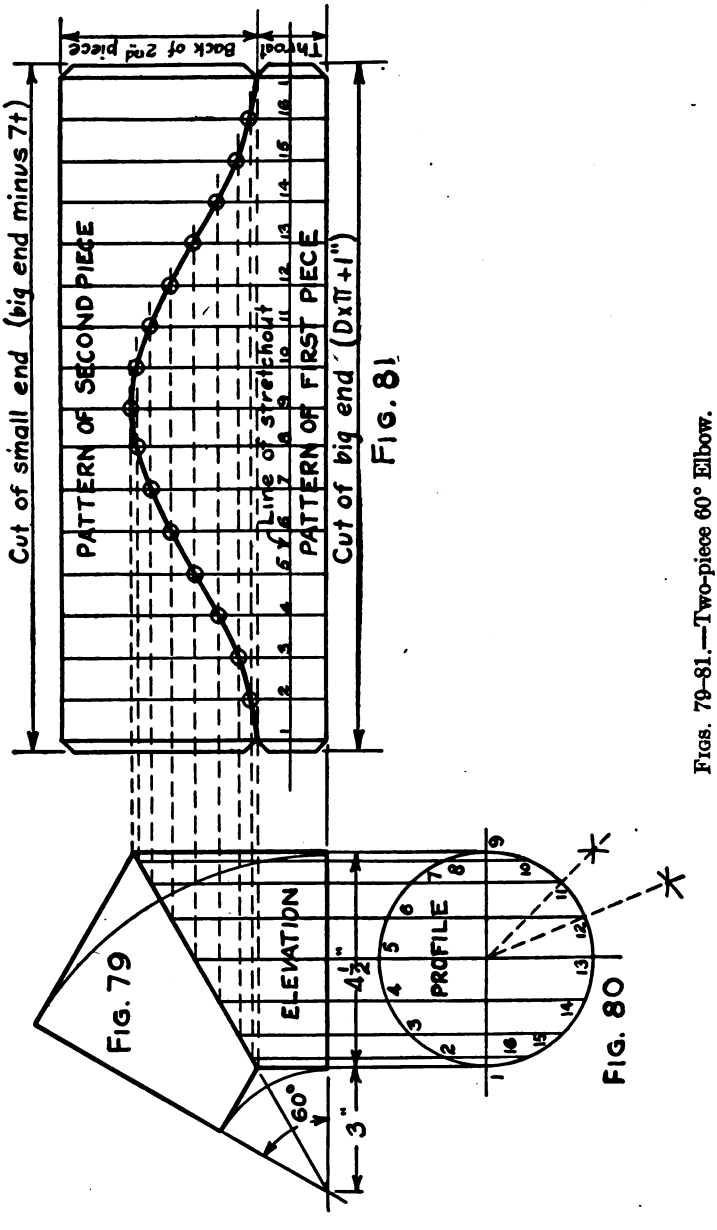

FIGS. 79–81.—Two-piece 60° Elbow.

Digitized by Google

of the stretchout can be drawn upwards indefinitely. Since the miter cut of both pieces are exactly alike, the pattern of the second piece can be constructed above that of the first piece. This will bring the seam of the second piece on the back. A distance equal to the back of the second piece, as shown in the elevation, Fig. 79, should be set off above the miter cut on lines 1 and 1. A horizontal line connecting these points will complete the pattern for the second piece (small end). One-half inch locks are added to each side of the stretchout. Notice the notching at the miter cut. The big and small end cuts should be computed and placed upon the pattern. The small end of every elbow is always cut straight; i.e., one half of the deduction for the small end is taken off the entire length of the lock on each side of the pattern. No piece of a cylindrical elbow should be tapered, as it adds to the difficulty of assembling, and is of no advantage when erecting a piping system. The direction, "big end minus 7 t" in Fig. 81, means the cut of the big end minus seven times the thickness of the metal used. Figure 78 shows how a piece of paper fitted to the first piece of an elbow would unroll to produce the pattern.

Digitized by Google

Problem 12

FOUR-PIECE 90° ELBOW

28. The Four-piece 90° Elbow.—In laying out this elbow, Fig. 82, an angle of 90° should first be drawn. A distance equal to the sum of the throat radius and the diameter of the elbow should be laid off upon the horizontal side of this angle. The arcs of the throat and the back are then drawn in. A four-piece elbow has six backsets. Consequently, the arc of the back should be divided into six equal parts. Miter lines are next drawn through the first, third, and fifth divisions of the arc of the back, above the base line. This gives the first piece of the elbow one backset, the second piece two, the third piece two, and the fourth, or last piece, one.

Perpendiculars from the starting point of each arc are erected until they meet the first miter line. From these points straight lines are drawn so that they just touch the arc at one point and continue on until they meet the next miter line. In like manner straight lines representing the third piece of the elbow are drawn. The elevation is completed by straight lines drawn from the intersection of the third miter line to the ends of the arcs. The length of each miter line thus established can be tested with the dividers. If all are not of equal length, the drawing is incorrect. The elevation of an elbow is always drawn around the outside of the arcs. The straight lines of the throat and back are never drawn inside of the arcs. Many students make this mistake in the elevation and thereby produce an elbow wholly different from the one intended. The profile, Fig. 83, should be drawn and divided into sixteen equal parts. Extension lines are carried upwards from each division until they meet the miter line. The line of stretchout and the measuring lines of the stretchout, Fig. 84, are drawn. The spacings of the profile are transferred to the line of stretchout with numbers to correspond. Extension lines from each intersection of the miter line are carried over into the stretchout. Each division of the profile should be traced by means of the extension lines, first to the miter line, and thence to the correspondingly numbered line in the stretchout. Each point thus located in the stretchout should be marked with small circles. A curve drawn through these points will give the miter cut of the big end.

Digitized by Google

It has already been shown that all miter cuts in the same elbow are exactly alike as to shape and size. Therefore, it is only necessary to reverse the pattern of the big end to get the miter cuts for the other pieces. Figure 84 shows all four pieces as they would appear when laid out on the metal in the shop. The man in the shop cuts a rectangular piece of iron the proper size, sets off the dimen-

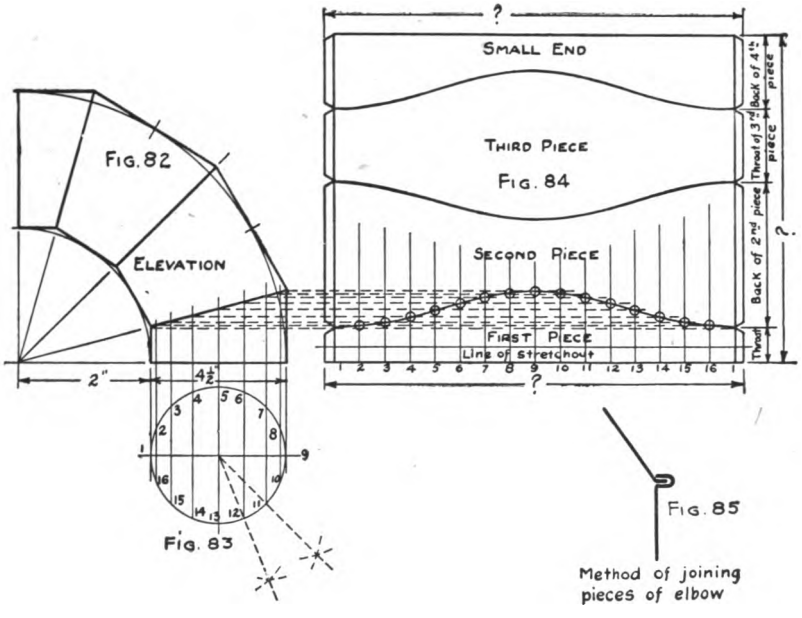

FIGS. 82–85.—Four-piece 90° Elbow.

sions of the backs and throats, and by reversing the pattern for the big end, gets the entire layout. The section in the lower right-hand corner, Fig. 85, shows the method used to join the pieces of the elbow together. An elbow made in this manner is known to the trade as a "peened elbow." The single and double edges are prepared in the turning machine (thick edge) and, after being slipped together, the double edge is clinched over the single edge with the peen of the hammer.

Digitized by Google

Problem 13

LONG RADIUS ELBOWS

29. The Long Radius Elbows.—The principles of pattern cutting that apply to long radius elbows such as used in conveyor systems are the same as in the preceding problems. There are, however, certain rules that apply to "Blow Pipe Elbows" that should be thoroughly understood. Figure 86 shows a partial elevation of a five-piece elbow. Since the pattern for all pieces can be laid out from the pattern of the first piece, it follows that all necessary information can be obtained from an elevation of the first two pieces of an elbow. A draftsman rarely draws more than two pieces of the elevation and divides the arc of the throat instead of the arc of the back. He uses the arc of the throat because it requires less room than the arc of the back and produces the same result.

Center Line Radius.—It has been determined by careful experiment that an elbow having a center line radius equal to twice the diameter of the pipe to which the elbow is to be joined, offers the least resistance to the flow of air, or other material, through the pipe. According to this rule an elbow for 12-inch pipe would have a throat radius of 18 in. and a center line radius of 24 in. A blow pipe elbow should never be "peened." All laps and edges should be closely riveted and soldered air-tight, the inside to be made as smooth as possible. All laps should be made in the direction of flow of air or other material through the pipe.

Laps for Riveting.—In the case of the "peened" elbow no allowance is made for joining the pieces. This alters the throat radius somewhat but this fact is generally neglected. In blow pipe systems the work must be exactly to measurements. Laps for riveting are, therefore, added as shown in Fig. 89. It should be noted that the rivet holes for the longitudinal seams are on the circumference lines of the pattern, while those for the transverse seams are in the center of the lap. The rivet holes are equally spaced and as the lap is $\frac{3}{4}$ in. wide, the centers of the holes are $\frac{3}{8}$ in. in from the edge of the lap, and $\frac{3}{8}$ in. in from the miter cut of the adjoining piece of the elbow. Laps are added to one miter cut only (of each piece) and start with the lap on the big end.

Thickness of Metal Used.—Another rule always to be observed is to make the elbow at least two gages heavier than the pipe to

Digitized by Google

which the elbow is to be joined. The patterns shown in Fig. 88 should be separated sufficiently to allow for a lap between each piece and must be so drawn by the student. The laps should be $\frac{3}{4}$ in. wide. Rivet holes on all sides of each piece should be shown. Figure 90 shows the first and second pieces of an elbow after being "fitted." The throat is "laid off" with the stretching hammer, and the back is "drawn in" with a mallet or raising hammer. By

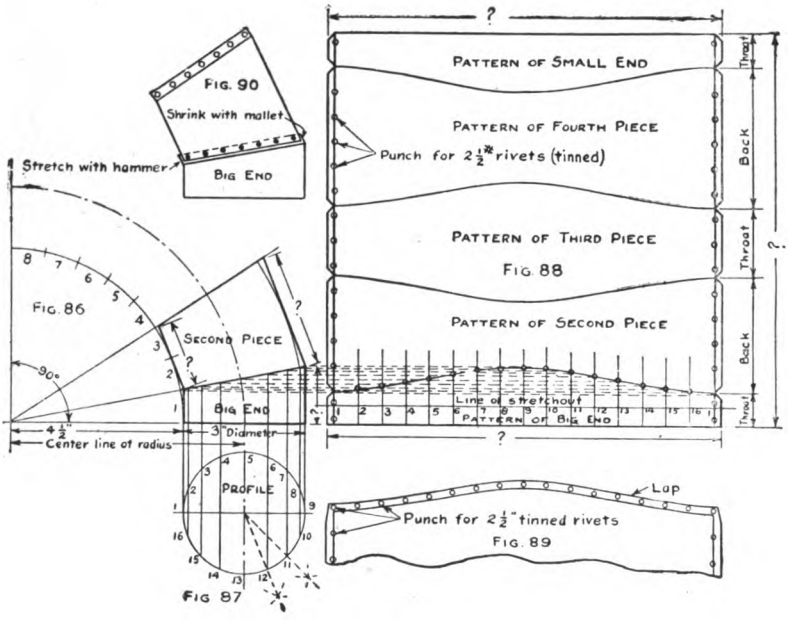

FIGS. 86-90.—Long Radius Elbows.

this method the miter cuts of each piece are "butted" and the true curvature of the elbow preserved.

30. Related Mathematics on Elbows.—*Problem 13A.—Backsets of an Elbow.*—(See description of Fig. 77 for rule.)

(*a*) How many backsets has a four-piece, 90° elbow?
(*b*) How many backsets has a six-piece, 75° elbow?
(*c*) How many pieces has an elbow having fourteen backsets?
(*d*) How many miter lines has a six-piece elbow?

Problems on the Rise of the Miter Line.—An elbow is always

Digitized by Google

measured by the degrees of the angle formed by straight lines drawn from its extremities to the center of the elbow, Fig. 77. Since all backsets in the same elbow are equal, the value of the backset can be expressed in degrees. A five-piece elbow has 8 backsets. A five-piece 90° elbow would have each backset equal to 90°÷8 or 11¼°. The first piece of any elbow contains one backset, the last piece one, and every other piece contains two. Therefore, the rise of the miter lines for a five-piece 90° elbow would be:

Rise of 1st miter line would be $11\frac{1}{4}° \times 1 = 11\frac{1}{4}°$, having but one backset.
" 2nd " " $11\frac{1}{4}° \times (1+2) = 33\frac{3}{4}°$, by adding two backsets.
" 3rd " " $11\frac{1}{4}° \times (3+2) = 56\frac{1}{4}°$, by adding two backsets.
" 4th " " $11\frac{1}{4}° \times (5+2) = 78\frac{3}{4}°$, by adding two backsets.

Problem 13B.—Give the rise of each miter line in a four-inch, four-piece, 75° elbow.

Problem 13C.—Give the rise of each miter line in a three-piece, 90° elbow.

Problem 13D.—Give the value in degrees of the backset of a two-piece, 12° elbow.

Problem 13E.—Give the value in degrees of the backset of a three-piece, 24° elbow.

Problem 13F.—Give the value in degrees of the backset of a four-piece, 36° elbow.

Problem 13G.—Give the value in degrees of the backset of a five-piece, 48° elbow.

Problem 13H.—Give the value in degrees of the backset of a six-piece, 60° elbow.

Problem 13I.—Give the value in degrees of the backset of a seven-piece, 72° elbow.

Problem 13J.—Give the value in degrees of the backset of an eight-piece, 84° elbow.

Problem 13K.—For the same big end diameter, why would one pattern answer for all of the elbows mentioned in problems 13D to 13J inclusive?

PROBLEMS ON THE "CUTS OF AN ELBOW"

Problem 13L.—What would be the "big end cuts" of the following sizes of elbows? Add the standard stovepipe lock of one inch.

Digitized by Google

(*a*) An elbow for 12″ pipe?
(*b*) An elbow for 14″ pipe?
(*c*) An elbow for 18″ pipe?
(*d*) An elbow for 24″ pipe?

Problem 13M.—The "small end cut" of an elbow, or pipe, is always found by deducting seven times the thickness of the metal used from the cut of the big end. What would be the "small end cut" of the elbows in Problem 13L, if No. 20 U. S. S. Gage steel was used? Number 20 gage is .037″.

Problem 13N.—Fill in the columns in the table of deductions given below. The figures for the third column are obtained by multiplying those of the second column by 7. The figures for the fourth column are obtained by dividing those of the third column by .0156. This will give answers in 64ths of an inch since .0156 is the decimal for $\frac{1}{64}$.

Example of columns filled in:

Gage	Decimal Thickness	Decimal Deduction	Fractional Deduction
No. 23	.028125″	.196875″	$\frac{13}{64}$″ (nearly)

TABLE OF DEDUCTIONS FOR SMALL END CUTS

U. S. S. Gage	Decimal Equivalent, Thickness in Inches.	Decimal Deduction, Thickness × 7	Fractional Deduction, Decimal Deduction ÷ .0156
No.			
28	.015625		
26	.01875		
24	.025		
22	.03125		
20	.037		
18	.05		
16	.0625		
14	.078125		
12	.109375		

Digitized by Google

STANDARD CUTS OF PIPE

Manufacturers of pipe and elbows have adopted the following standards for big end cuts for stove and conductor pipe.

TABLE OF STANDARD BIG END CUTS FOR PIPE AND ELBOWS

Pipe Size	Stovepipe (1″ lock)	Conductor Pipe (½″ lock)	
		Size	Cut
4″	14″	2″	6⅞″
4½″	15½″	2½″	8⅝″
5″	17″	3″	9⅞″
5½″	18½″		
6″	20″		
7″	23″		
8″	26″		
9″	29¼″		
10″	32″		

CENTER LINE RADIUS

As explained in Fig. 77 the center line radius is the distance measured along the base line from the center of the elbow to the center point of the diameter of the big end. The arc of the center line is also shown in Fig. 77.

Problem 13 **0.**—What will be the center line radius for the following elbows? (*a*) A 14″ diameter elbow? (*b*) A 7″ diameter elbow? (*c*) A 9″ diameter elbow?

WEIGHT OF AN ELBOW

To get the weight of an elbow multiply the length of the center line arc by the "cut" of the big end, and this quantity by the weight per square foot of the material used.

Example.—What will be the weight of a 4″, four-piece, 60° elbow made from No. 24 galvanized iron? Diameter of the elbow is 4″; Center Line Radius is 8″.

Since the center line radius is 8″ the center line arc must be a part of the circumference of a circle whose diameter is 16″. The circumference of a 16″ circle = $16 \times \pi$ or 50.625″. Since the elbow has an angle of 60° the center line arc can be but $\frac{60}{360}$ or $\frac{1}{6}$ of the whole circle. Therefore, the length of the center line arc would be $\frac{1}{6}$ of 50.625″ or 8.377″. The big end cut for a 4″ elbow

Digitized by Google

is 14″ and the surface area is $14 \times 8.377 = 117$ sq. in. (nearly). One square foot or 144 sq. in. of No. 24 galvanized iron weighs 1.156 lb. Therefore, 117 sq. in. would equal $\frac{117}{144}$ of 1.156 or 1.136 lb. (*Ans.*)

The table given below shows the weight in pounds per square foot of the gages of metal in common use in the shop.

TABLE OF WEIGHTS PER SQUARE FOOT OF GALVANIZED AND BLACK SHEETS

Gage U. S. S. Standard	Galvanized Steel Wt. per sq. ft. in lb.	Black Steel Wt. per sq. ft. in lb.
28	0.7812	0.6375
26	0.9062	0.765
24	1.156	1.02
22	1.406	1.275
20	1.656	1.53
18	2.156	2.04
16	2.656	2.55
14	3.281	3.187
12	4.531	4.462

Problem 13P.—How much would a 90°, 7″ elbow weigh if made from No. 22 galvanized iron? Elbow to have standard radius but to be "peened."

Problem 13Q.—What would be the weight of a 90°, 8″ elbow having a throat radius of 8″ and made of No. 20 black iron?

Note.—When the throat radius is less than standard, add one-half of the diameter of the big end to get the center line radius.

Problem 13R.—How large a piece of iron would be required to make a 75°, 10″ diameter, standard blow pipe elbow of eight pieces? Add $\frac{3}{4}$″, for a lap on each piece, to the length of the center line radius.

Digitized by Google

Problem 14

THE BACKSET METHOD

31. The Backset Method.—The Backset Method is a short, but accurate, method of developing an elbow pattern. Figures 91 and 92 show the elevation and profile of an elbow, the pattern of which is developed in the manner previously described. It should be noticed that the pattern has been moved over to the right to allow a half circle to be drawn between it and the elevation. The extension lines cut this half circle at points *A*, *B*, *C*, *D*, *E*, *F*, *G*, *H*, and *J*. These views should be carefully drawn and placed in the position shown.

The distances between *A* and *B*, *B* and *C*, etc., should be exactly equal if the drawing is carefully made. The diameter of this half circle is equal to the height of the backset. Because of the foregoing, the elevation and profile are not necessary if the backset height in inches is known. The half circle divided into equal spaces can be used instead.

Figure 94 shows a five-piece, 90° long radius elbow laid out by this Backset Method. A piece of metal is cut of sufficient size to make the whole elbow. A horizontal line is drawn to represent the height in the throat of the first piece. Above this, another line is drawn to represent the height of the backset of the elbow. Lock lines are next drawn $\frac{1}{2}$ in. in from the right and left-hand edges of the blank. The half circle is next drawn in the backset as shown. This half circle is divided into eight equal parts. The girth (distance between the lock lines) is next divided into sixteen equal parts. The girth in Fig. 94 is 28 in. and each space would equal $28 \div 16$ or $1\frac{3}{4}$ in. The dividers can be set $1\frac{3}{4}$ in. and the spacing performed without repeated trials. Measuring lines are then drawn through each division at right angles to the bottom of the blank. A rectangular piece of metal with one edge turned to a right angle is a convenient tool for drawing these lines. Extension lines are carried over from each division of the half circle, and points of intersection determined. A curved line through these intersections will complete the pattern of the first piece. Experienced men can locate the intersections with four settings of the compass because point *B* is the same distance from the top as point *H* is from the bottom line. This

Digitized by Google

is also true of points E and G, and D and F, while point E is in the center. The student should try and see if he can learn the

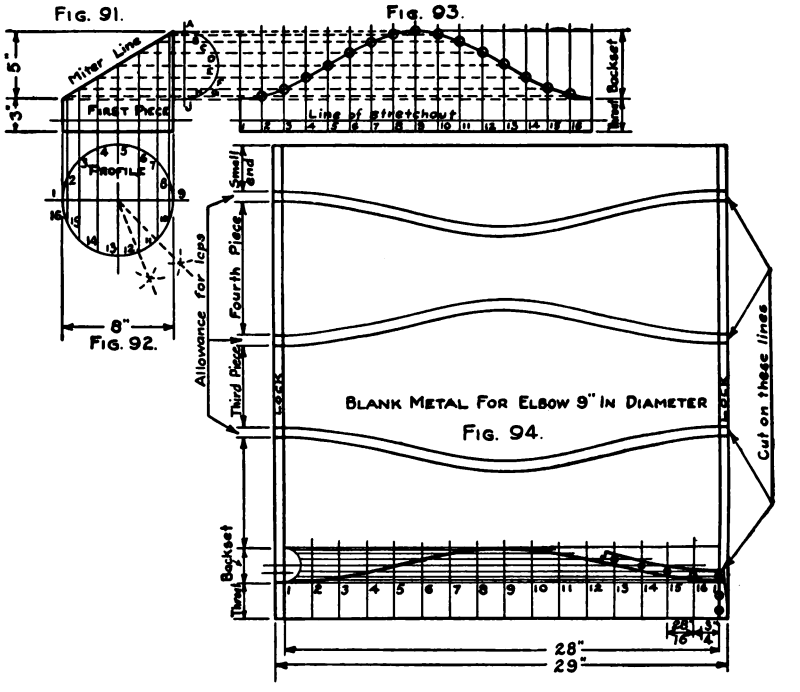

Figs. 91–94.—Use of the Backset Method.

method of doing this, thereby saving time by doing away with the extension lines drawn from the half circle. The laps necessary for riveting the pieces together are shown in Fig. 94.

Digitized by Google

CHAPTER IV

INTERSECTING CYLINDERS

Prob. No.	JOB	DRAWING OBJECTIVE	MATHEMATICAL OBJECTIVE
15 & 16	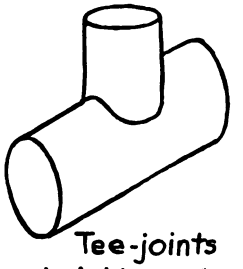 Tee-joints at right angles.	Extension of idea of cylinder cut by planes.	Area of circle. Idea of tangent.
17 & 18	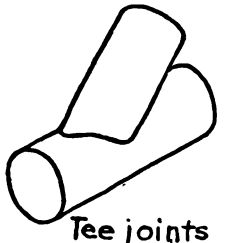 Tee joints not at right angles.	Front and end elevations are necessary for this type of Tee	Altering the size of main pipe to compensate for branch pipes.

Objectives of Problems on Intersecting Cylinders.

Digitized by Google

Problem 15

TEE JOINT AT RIGHT ANGLES

32. The Tee Joint at Right Angles.—The name commonly applied to two pipes that intersect is "Tee Joint." Some forms of these joints are known in various localities as "Y-Branches" and "Tee Y's." One of the scoops, Fig. 72, was a cylinder cut by a curved plane. A study of Fig. 95 will reveal a similar condition, the branch pipe being cut by the curved surface of the main pipe.

Side Elevation.—The side elevation should be drawn according to the dimensions given in Fig. 96. The profile should be drawn above the side elevation to avoid a confusion of lines. The profile must be divided into sixteen equal parts, and each part numbered, Fig. 96. Extension lines are dropped downward from each division of the profile until they intersect the circumference line of the main pipe. These intersections, *A*, *B*, *C*, etc., are lettered as shown.

Front Elevation.—Extension lines are used to locate properly the front elevation, Fig. 97. A profile is drawn above the front elevation. This profile is divided into as many equal spaces as there are in the profile first drawn. Both profiles must be of the same size since they represent the same pipe. The profile, Fig. 97, should be numbered as shown. It should be noticed that number 1 of the profile of Fig. 96 is at the bottom, while number 1 of the profile of Fig. 97 is on the left-hand side of the horizontal diameter. This is an important fact, and is true of every drawing that has two elevations. Whatever is directly in front in the side elevation appears on the left-hand side in the front elevation. The true shape of the miter line in the front elevation cannot be shown until it is developed. To do this, extension lines are carried over into the front elevation from points *A*, *B*, *C*, etc., of the apparent miter line, Fig. 96. Extension lines are also dropped from each division of the profile in Fig. 97. Starting at point 1 of the side elevation profile, the extension line is traced downward to the apparent miter line, and then horizontally to a correspondingly numbered line dropped from the profile of Fig. 97. This point is marked with a small circle. All other points of the profile of Fig. 96 should be traced in like manner. A curved line drawn through these intersections will give the developed miter line.

Digitized by Google

Pattern for the Tee.—After drawing the line of stretchout, the spacing of either profile (both profiles are the same size) is

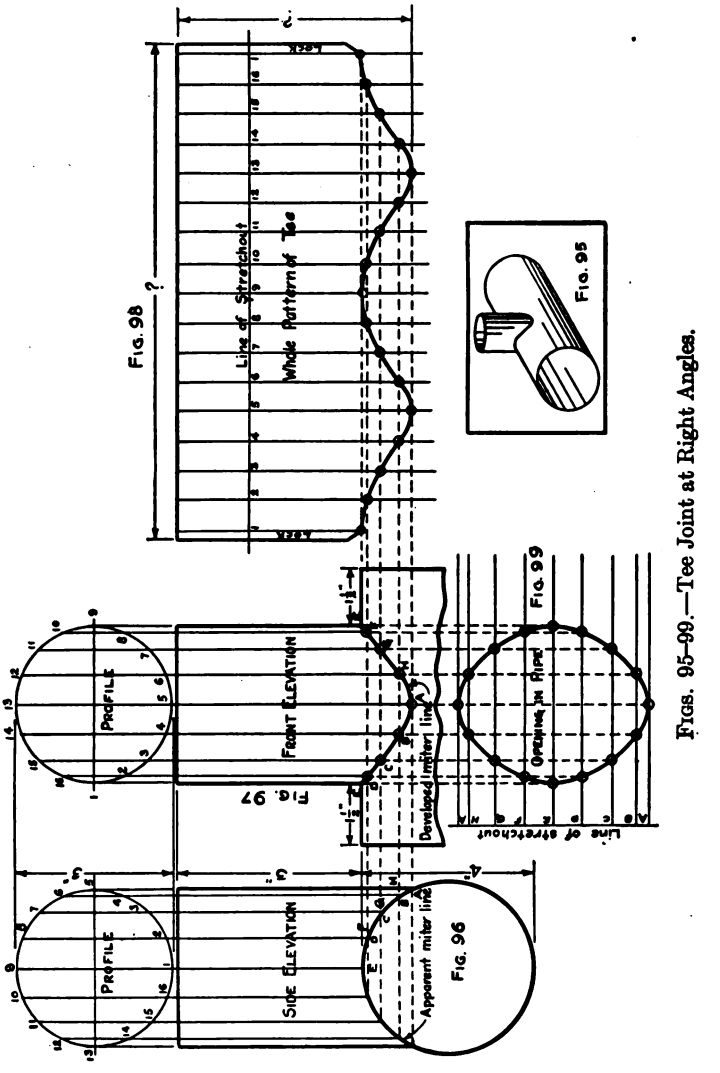

Figs. 95–99.—Tee Joint at Right Angles.

transferred and numbered to correspond. The measuring lines of the stretchout should also be drawn in. Starting at point 1 of the front elevation profile, the extension line should be followed to

Digitized by Google

the developed miter line, and thence to the correspondingly numbered line of the stretchout. This intersection is marked with a small circle. In like manner all the remaining points in the profile of Fig. 97 should be traced and the intersections of each with its corresponding measuring line in the stretchout determined. A curve traced through these intersections will give the miter cut of the pattern.

Opening in Main Pipe.—A line of stretchout, Fig. 98, is first drawn at right angles to the main pipe. The spacings of the apparent miter line, Fig. 97, are set off upon this line, and these divisions lettered to correspond to the lettering of the apparent miter line. Measuring lines from each point are drawn at right angles to the line of stretchout. The intersections of the developed miter line, as shown in Fig. 97, should now be lettered. It should be noticed that the position of the lettering is changed as was the numbering of the profile, and for the same reason. A line is dropped from point *E* of the developed miter line until it intersects line *E* of the stretchout in Fig. 99. The intersection is marked with a small circle. In like manner intersections for all other points of the developed miter line should be located. A curve drawn through these intersections will give the true shape of the opening in the main pipe, Fig. 99.

Digitized by Google

Problem 16

TANGENT TEE AT RIGHT ANGLES

33. The Tangent Tee at Right Angles.—When a straight line and the circumference of a circle touch each other at but one point, the straight line is said to be tangent to the circle. Their point of meeting is called the point of tangency. A straight line from the center of the circle, meeting the tangent at an angle of 90°, locates the point of tangency. In Fig. 101, the tangent and the point of tangency are plainly indicated.

Tangent Tee.—When the tee joint is so placed upon the main pipe that one side of the tee is tangent to one side of the main, as in Fig. 100, the fitting is known as a "Tangent Tee." The use of this type of fitting enables the designer to keep the distance from the ceiling to the top of every horizontal pipe uniform throughout the entire system. All hangers for the piping can be made the same length and the entire job will have a neater and more workmanlike appearance.

Side Elevation.—A side elevation should be drawn according to the dimensions given in Fig. 101. After drawing a profile, it should be divided into sixteen equal spaces, and extension lines from each division carried to the apparent miter line. The divisions of the profile should be numbered, and the intersections of the apparent miter line lettered as shown in Fig. 101.

Front Elevation.—The front elevation can be located by extension lines. Another profile should be drawn above the front elevation. It must be divided into the same number of equal spaces as the profile of Fig. 101. It is to be numbered, placing number 1 on the left-hand side. Extension lines are dropped from each division of the profile, Fig. 102. Other extension lines are carried over from the intersections of the apparent miter line, Fig. 101, until they intersect the extension lines drawn from the profile. Starting from point 1 in profile of Fig. 101, the extension line should be traced downward to the apparent miter line, and thence to a correspondingly numbered line dropped from the profile of Fig. 102. In like manner, all the divisions of the profile, Fig. 101, can be traced and each intersection marked with a small circle as shown in Fig. 102. A curved line passing through these points will give the developed miter line. One-

Digitized by Google

half of the developed miter line is dotted to represent that part of the line that cannot be seen from the front.

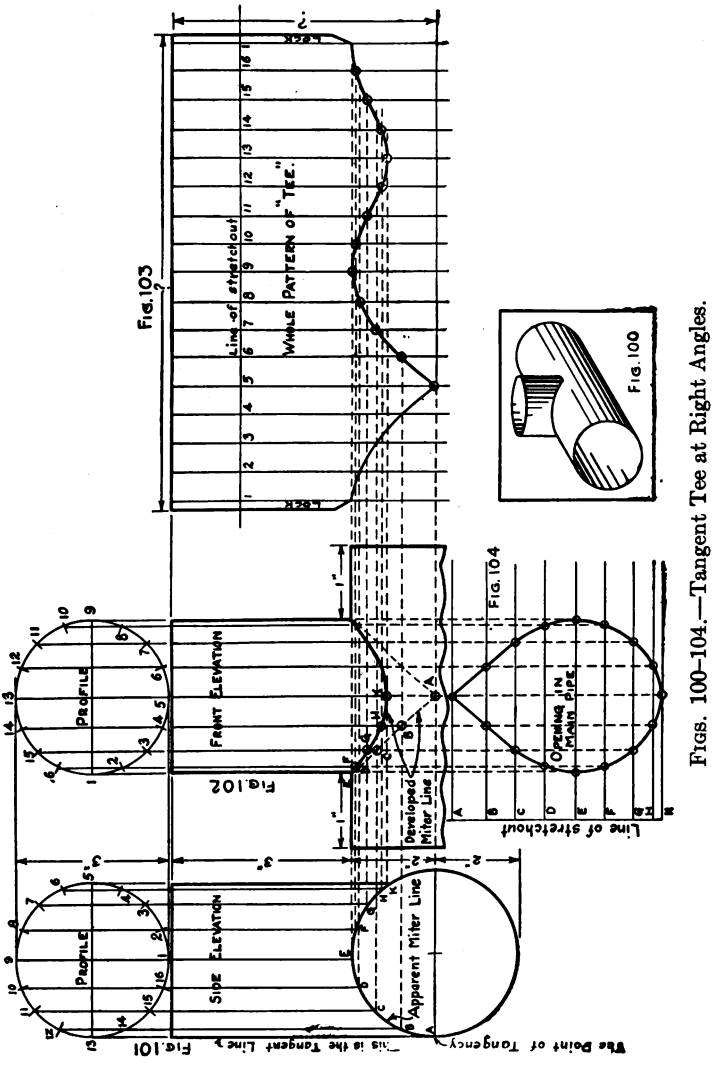

FIGS. 100–104.—Tangent Tee at Right Angles.

Pattern for the "Tee."—Draw the line of stretchout, Fig. 103. The spacing of the profile should be transferred and the divisions numbered to correspond to the numbers of the profile. The

Digitized by Google

measuring lines of the stretchout should be drawn. Starting at point 1 of the front elevation profile, the extension line is to be followed to the developed miter line, and thence to a correspondingly numbered measuring line in the stretchout. This intersection should be marked with a small circle. All the other points in the profile of Fig. 102 are traced in like manner, and the intersections for each measuring line in the stretchout determined. A curve traced through these intersections will give the miter cut of the pattern.

Opening in Main Pipe.—A line of stretchout, Fig. 104, must be drawn at right angles to the main pipe. The spacing of the apparent miter line is to be set off upon this line. These divisions are lettered to correspond to those of the apparent miter line, Fig. 101. Measuring lines, at right angles to the line of stretchout, are drawn from each point. The intersections of the developed miter are lettered as shown in Fig. 102. The position of the letters must be changed in the same way as the numbers in the profiles of Figs. 96 and 97. A line should be dropped from the point *E* of the developed miter line until it intersects the line *E* of the stretchout in Fig. 104. The intersection of the two lines is marked with a small circle. In like manner, intersections for each division of the developed miter line, as shown in Fig. 102, can be located. A curve traced through these intersections will give the true shape of the opening in the main pipe.

Digitized by Google

Problem 17

TEE JOINT NOT AT RIGHT ANGLES

34. The Tee Joint Not at Right Angles.—The tee joint not at right angles is used for conveyor systems, and in heating and ventilating work. The abrupt change of direction in the Tee Joint at right angles causes a drop in velocity that seriously affects the working of an entire system. The greatest angle of deflection allowable in a Tee Joint not at right angles is 45° from the direction of flow as in Fig. 105. Many firms use an angle of 30°.

Side Elevation.—The side elevation should be drawn using the dimensions given in Fig. 106. The branch pipe is represented as being broken in this view, because the upper part of the branch plays no part in developing the pattern. A profile, Fig. 106, divided into sixteen equal parts, which are numbered, is now drawn. Extension lines are carried downward from each division until they meet the apparent miter line. The intersections of the apparent miter line *A*, *B*, *C*, etc., are lettered as shown in Fig. 106.

Front Elevation.—The front elevation, Fig. 107, should be drawn in outline. The "tee" is set at an angle of 45° to the main pipe as shown. The profile of the "tee" should be drawn and divided into sixteen equal parts. An extension line from each division of this profile is carried downward and to the right; that is, parallel to the sides of the branch.

Developing the Miter Line.—Horizontal extension lines from each intersection of the apparent miter line are carried over into Fig. 107. If a view were to be taken along these lines in the direction of the arrow, the eye would see two points, *D* and *F* for instance, on each line. But Fig. 106, the side elevation, represents such a view; therefore the intersections of the front half of the apparent miter line must each have two letters. Starting at the point *A* in Fig. 106, the intersections of the apparent miter line must be lettered as shown. Starting from point 1 in the profile of Fig. 106 the extension line can be traced downward to the apparent miter line, and thence to the correspondingly numbered line, dropped from the profile of Fig. 107. In like manner, the other intersections for the developed miter line are located and the curve drawn.

Digitized by Google

Pattern for the "Tee."—After the line of stretchout is drawn at right angles to the tee in Fig. 108, the spacing of the profile should be set off on it and the divisions numbered to correspond. The measuring lines of the stretchout are put in at right angles to the line of stretchout. Since the branch is at an angle of 45°, all of this construction work can be drawn with the T-square and the 45° triangle. Extension lines parallel to the line of stretchout are

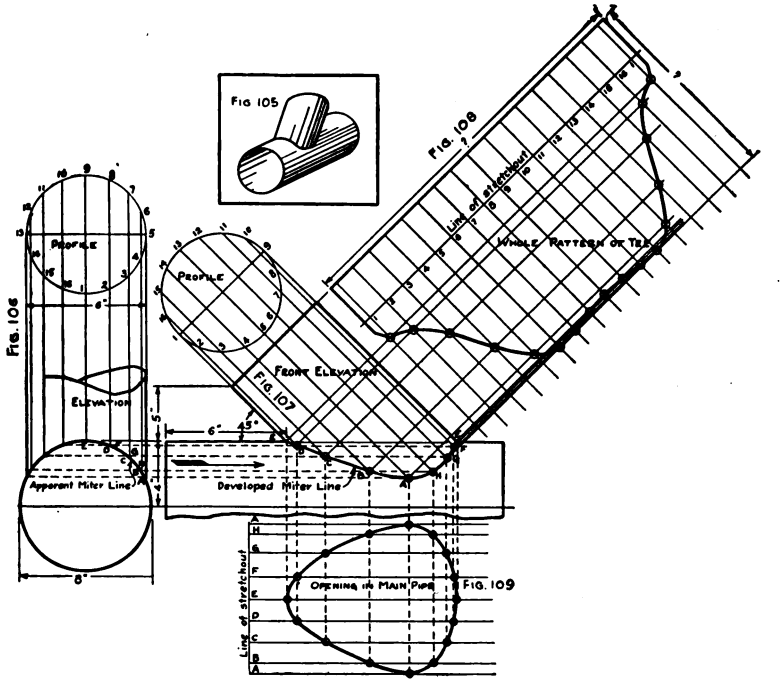

Figs. 105–109.—Tee Joint Not at Right Angles.

carried from each intersection of the developed miter line until they cut corresponding measuring lines in the stretchout. A curved line through these intersections will give the miter cut of the pattern.

Opening in Main Pipe.—A line of stretchout, Fig. 109, is drawn at right angles to the main pipe of Fig. 107. The spacings of the apparent miter line are set off on this line and the divisions lettered to correspond. Measuring lines are drawn from each point at

Digitized by Google

right angles to the line of stretchout. The intersections of the developed miter line should be lettered as shown in Fig. 107. An extension line is dropped from point *E* of the developed miter line, until it meets line *E* of the stretchout. In like manner, intersections for all other points in the developed miter line are located. A curve drawn through these points will give the true shape of the opening in the main pipe.

Digitized by Google

Problem 18

TANGENT TEE NOT AT RIGHT ANGLES

35. The Tangent Tee Not at Right Angles.—Figure 111 shows a side elevation which has the same appearance as the side elevation of Fig. 106. The branch pipe, however, is tipped towards the eye as will be seen by studying Fig. 112. *Every tangent tee at other than right angles must have the entire miter line developed.* The method of drawing this problem does not vary from that of the preceding one. Consequently, the method need not be repeated here. The student is cautioned to follow each step carefully.

The student has perhaps noticed a similarity of method for developing the patterns for all cylinders. Such pattern problems come under the head of "Parallel Line Drawing," which takes its name from the fact that the sets of extension and construction lines are parallel to one another. The following general rules apply to parallel line developments, and, if carefully followed, can be applied to any problem of this class with success.

Rule 1.—Draw a side elevation, if necessary, to show a true miter line.

Rule 2.—Draw a front elevation, if necessary, to show a true miter line.

Rule 3.—Draw necessary profiles.

Rule 4.—Divide the profiles into equal spaces, and number the divisions.

Rule 5.—Carry extension lines from each division of the profile to the miter line.

Rule 6.—Develop a miter line if necessary.

Rule 7.—Draw a line of stretchout, transfer the spacing of the profile to this line, and number to correspond.

Rule 8.—Draw the measuring lines of the stretchout.

Rule 9.—Carry the extension lines over into the stretchout, from each division of the true miter line.

Rule 10.—Trace the intersections of the stretchout, beginning at the profile, thence to the miter line, and from there to a correspondingly numbered line in the stretchout.

Front elevations, Figs. 107 and 112, could be dispensed with in tee joints at right angles. As a matter of fact, experienced layer-

Digitized by Google

outs never draw them. They are included here for instructional purposes.

36. Related Mathematics on Tangent Tees and Tee Joints.—*Altering the Main Pipe Size.*—In a blow-through system, whenever a branch is taken from the main pipe, the diameter of the main must be reduced beyond that point. Also, if a branch pipe is added on to the main of an exhaust system, the diameter of the

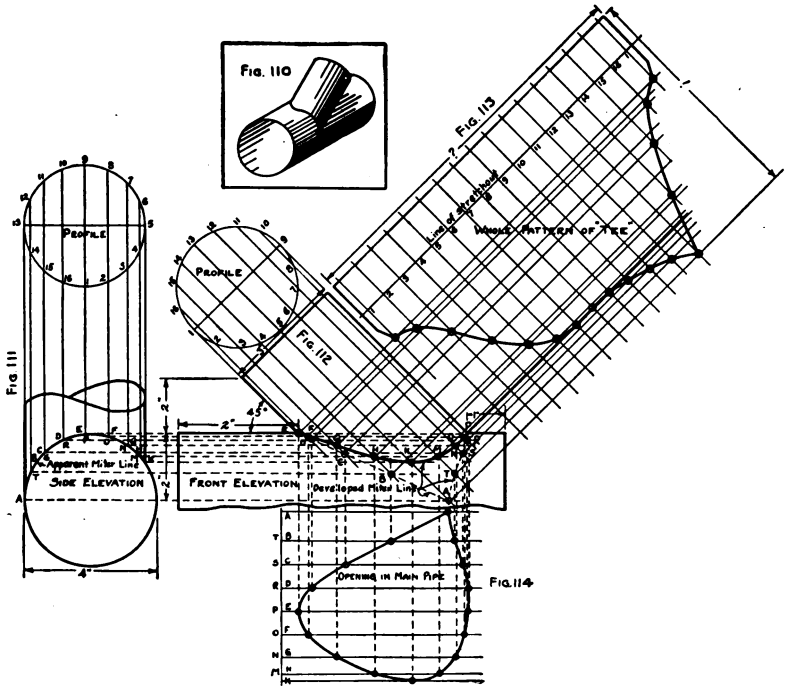

Figs. 110–114.—Tangent Tee Not at Right Angles.

main must be increased. By so doing, the original velocity and static pressures are preserved and the system exerts an equal "pull" at all points.

Rule for Altering the Size of Main.—The area of the main must be increased, or diminished, by an amount equal to the square inches of cross-sectional area of the branch. In other words, the cross-sectional area of the main must at all times be equal to the combined cross-sectional area of all its branches.

Digitized by Google

Sample Problem.—Two heaters are to be connected to a chimney flue by one pipe. One heater has a 7-inch, and the other a 9-inch neck. How large must a main pipe be to care for both heaters?

Formula for area, $A = D^2 \times .7854$

Substituting, $A = 7^2 \times .7854$

$= 38.485$ sq. in., area of 7″ pipe

and $A = 9^2 \times .7854$

$= 63.617$ sq. in., area of 9″ pipe.

Since this is an exhaust system the areas must be added to get the equivalent area of the main.

Equivalent area $= 38.485 + 63.617 = 102.102$ sq. in.

Transposing the above formula,

$D = \sqrt{A \div .7854}$ (Problem 8, Article 24.)

Substituting in this formula,

$D = \sqrt{102.102 \div .7854}$

$$\begin{array}{r|l|l} .7854 & 102.1020 & 130 \\ & 78\ 54 & \\ \hline & 23\ 562 & \\ & 23\ 562 & \\ \hline \end{array}$$

$\sqrt{130} = 11.4''$ $\qquad$ $11.4''$ *Ans.*

In actual practice we would make the pipe $11\frac{1}{2}''$ in diameter.

Problem 18A.—Two heaters are to be connected to a chimney flue by one pipe. One heater has an 8-inch, and the other a 10-inch neck. How large must the main pipe be to serve both heaters?

Problem 18B.—A battery of three steam heaters having $8\frac{1}{2}''$ smoke necks are to be connected to the chimney by one main pipe. (*a*) What will be the diameter of the main between the second and the third heaters? (*b*) What will be the diameter of the main between the third heater and the chimney?

Problem 18C.—Six blacksmith forges are to be connected to one smokestack. Each forge has a 6-inch neck. Give the size for the main pipe as each forge is "picked up."

Problem 18D.—In a shavings removal system a "sticker" is

Digitized by Google

to be provided for. Two hoods on the "sticker" have 5-inch necks, and two other hoods have 4-inch necks. How many square inches should be added to the area of the main pipe to care for this machine?

Problem 18E.—A forced draft heating system in a factory has a 9″ diameter outlet every 20 feet. The main pipe as it leaves the fan is 20″ in diameter. (*a*) How many 9″ branch outlets will this main serve? (*b*) What will be the diameters of the main after each branch is taken off?

Problem 18F.—Two boilers are set side by side. Each boiler has a rectangular smoke neck measuring 14″×37″. How large must the round pipe be made that is to convey the gases from these boilers to the stack?

Digitized by Google

CHAPTER V

CONES OF REVOLUTION

Prob. No.	JOB	DRAWING OBJECTIVE	MATHEMATICAL OBJECTIVE
19	CONICAL FLOWER HOLDER	Idea of the envelope of a cone. Elements of a surface.	Computing lateral area of a cone.
20	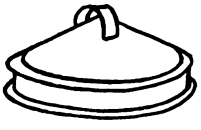 GARBAGE CAN COVER	Method of construction Semi-circular wired handles.	Computing weight of cover Drawing to scale
21	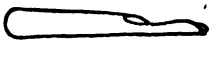 VEGETABLE PARER	Cones cut by planes.	Area of a frustum of a cone.
22 + 23	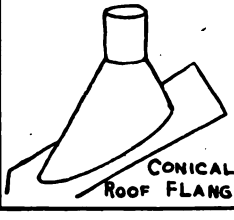 CONICAL ROOF FLANGE	Extension of idea of cones cut by planes Standard constructions	Computing weight of finished article from a scale drawing.

Objectives of Problems on Cones of Revolution.

Digitized by Google

Problem 19

CONICAL FLOWER HOLDER

37. The Conical Flower Holder.—The sketch, Fig. 115, shows a flower holder, such as is often carried in stock by florists. The body of this holder is a right cone.

Solid of Revolution.—Any plane surface rotating about a fixed point, or a line, generates a solid. For instance, a rectangle rotating about one of its sides generates a cylinder. A right-angled triangle rotating about its altitude generates a cone. Such a cone is known as a *Right Cone* or a cone of revolution.

Axis of the Cone.—The line about which the generating surface revolves in forming a solid of revolution is called the axis. It is the shortest distance between the apex (point) and the base, and forms a right angle to the plane of the base.

Elevation of the Cone.—The elevation of the cone, Fig. 116, is drawn in the following manner: Draw a horizontal line four inches long; from the center of this line drop a perpendicular seven inches long. Connect the ends of the four-inch line to the end of the seven-inch line by straight lines. The four-inch line is the *Base of the Elevation.* The seven-inch line is the *Altitude of the Cone.* The straight lines connecting the ends of the base and the altitude are the *Slant Height* lines of the elevation. Complete the elevation by drawing a wire nail, Fig. 116, which is to be "soldered" in after the cone is formed.

Profile of the Cone.—The profile of any cone of revolution is a true circle. This circle may be divided into two equal parts; therefore, it is necessary to draw but one-half of the profile as shown in Fig. 116. This profile is divided into equal parts and each division numbered. Extension lines are carried downward until they meet the base line of the elevation.

Elements of a Surface.—Dotted lines are shown in Fig. 116 running from each intersection of the base, to the apex. These represent imaginary lines drawn upon the surface of the cone. If lines were drawn upon the surface of the cone, until the surface was completely covered, each one of these lines would become a part, or an element, of the surface. Any surface may be regarded as being made up of an infinite number of lines placed side by side, each line being an element of the surface.

Digitized by Google

The slant height lines are also elements of the surface of the cone, and are the only elements shown in the elevation that represent the true distance from the base to the apex, along the surface of the cone.

The Arc of Stretchout.—With one point of the compass on the

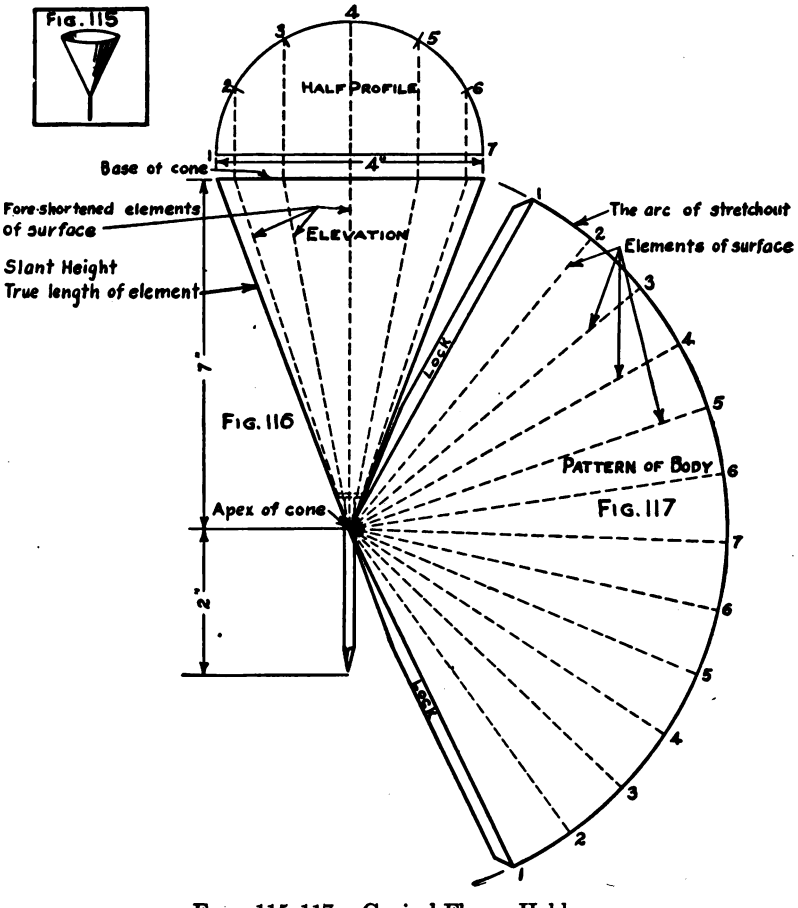

Figs. 115–117.—Conical Flower Holder

apex, and a radius equal to the slant height, an arc, Fig. 117, is drawn. Upon this arc, as many spaces are laid off as there would be in the whole profile, Fig. 116. Since this arc answers the same purpose as did the line of stretchout in parallel line drawing, it

Digitized by Google

can be called the arc of stretchout. The intersections on the arc of stretchout are numbered to correspond to the profile. Points 1 are connected with the apex and $\frac{1}{4}$-inch edges are added for a tin lock. Notice that the locks are parallel to lines number 1 and do not connect with the apex until they are "notched." The notch at the apex of any cone is made very long in order to bring the cone to a sharp point. The elements of the surface should be drawn, as shown in Fig. 117, and the length of these compared with the length of the corresponding foreshortened elements of Fig. 116.

38. Related Mathematics on Conical Flower Holder.—*Area of a Sector.*—A sector is a part of a circle set off by two radii and an arc. Is Fig. 117 a sector? What is the length of its radius? What is the length of its arc? If the length of the arc is multiplied by one-half of the radius, the result will be the area of a sector. Thus the area of a sector whose arc measures 14″ and whose radius is 7″ would equal $14 \times 3\frac{1}{2} = 49$ sq. in.

The length of the arc, Fig. 117, is equal to the circumference of the base of the cone (the profile). In addition, the radius of pattern, Fig. 117, is equal to the slant height of the cone, Fig. 116. Because of these facts, the formulæ for the area of a sector and for the lateral area of a right cone are very much alike.

Lateral Area of a Cone.—The lateral area of a right cone is equal to the circumference of the base times one-half the slant height.

Suppose the base of a cone is 5″ in diameter and the slant height is 12″. To find the lateral area, the circumference, which would equal $5 \times 3.1416 = 15.7080$″, must first be found. Then using the formula for area, $A = C \times \frac{\text{Slant Height}}{2}$

$$A = 15.708 \times \tfrac{12}{2}$$

$$A = 94.258 \text{ sq. in.}$$

Problem 19A.—How many square inches of surface area (lateral) has a right cone whose base is 7″ in diameter and whose slant height is $11\frac{1}{4}$″?

Problem 19B.—The base of a cone has a circumference of 96″ and a slant height of $102\frac{1}{2}$″. What is the area of its lateral surface in square inches?

Problem 19C.—How much would 1000 flower holders, Fig. 115, weigh if made from No. 28 galvanized steel (.7812 lb. per square foot)? Allow 5 per cent of total weight for waste.

Digitized by Google

Problem 20

PITCH TOP COVER

39. The Pitch Top Cover.—The cover of any receptacle should be made with a pitched top, such as considered in this problem, in order to obtain the necessary rigidity.

The Elevation.—The elevation of the pitch top cover appears as shown in Fig. 119. This cover consists of a cone top, joined to a cylindrical rim by a "clinched" seam. The rim has a No. 12 wire rolled into the bottom edge. A semicircular wired handle is drawn with a 2-inch radius by using the apex of the cone as a center. The distances C to B, and J to K, are straight lines connecting the semicircle and the slant height lines. The distance from A to B is 1 inch. The handle is joined to the cover by $1\frac{1}{2}$ lb. rivets.

The Profile.—A half-profile should be drawn, using extension lines to locate the view properly. The half-profile is divided into equal parts and each division numbered. The profile is equal in diameter to that of the rim inside of the wire. Extension lines are carried upwards from each division of the half-profile, to the base of the cone, and thence to the apex.

Drawing the Pattern.—With a radius equal to the slant height of the cone, and any point as a center, the arc of stretchout is drawn. The spacing of the half-profile is transferred to the arc of stretchout, doubling the number of spaces in order to obtain the whole pattern. The divisions are numbered as shown in Fig. 120. A $\frac{3}{8}$-inch edge parallel to the arc of stretchout is added to allow for joining the rim. The locks are drawn parallel to lines 1 and 1, Fig. 120. These locks are notched as indicated. The rivet holes may be located on any two elements that are opposite each other, viz., on 4 and 4, 3 and 5, 2 and 6, etc., but in shop practice they are generally placed 90° from the lock seam. This would bring them on lines 4 and 4 as in Fig. 120. The distance from the center of the pattern to the center of the holes is found by measuring downwards on the slant height, Fig. 120, from the apex of the cone to the center of the rivet as shown in the elevation.

Pattern for the Rim.—The pattern for the rim, Fig. 121, is a straight piece of metal the length of which is equal to $D \times \pi$ (diameter of profile $\times 3.1416$), and the width of which is equal to the

Digitized by Google

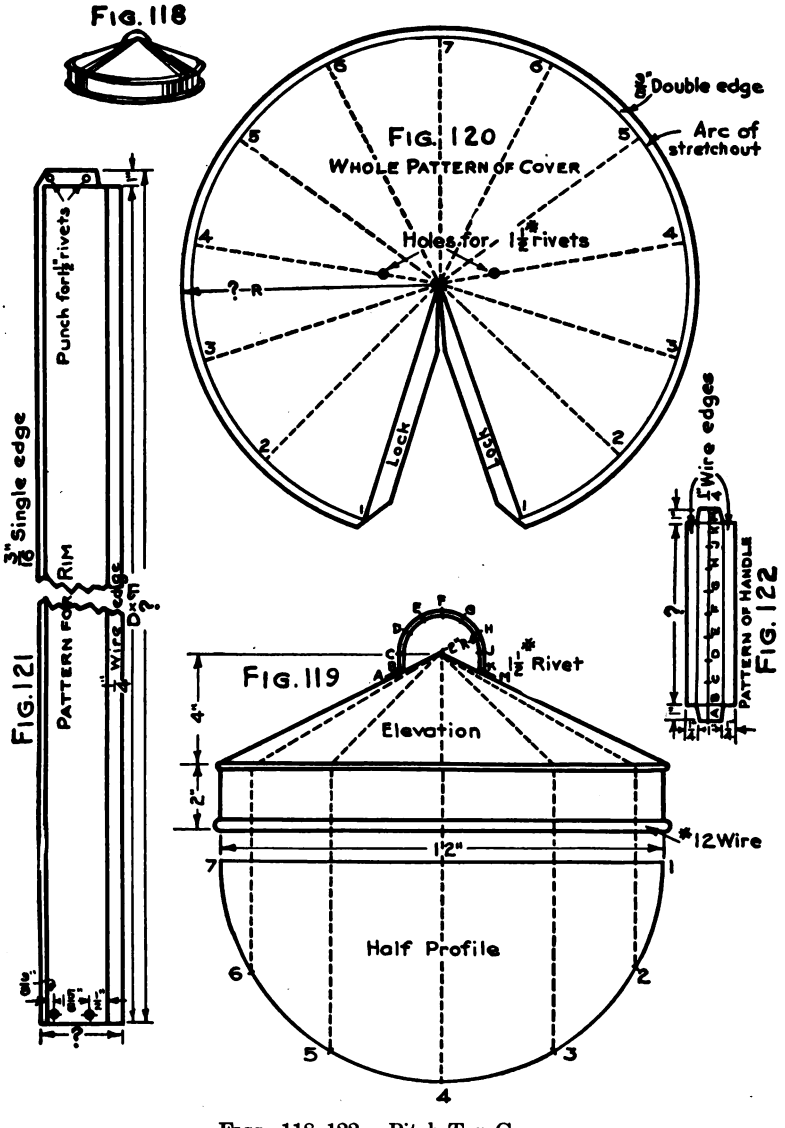

FIGS. 118–122.—Pitch Top Cover.

Digitized by Google

depth of the rim plus an allowance of $\frac{1}{4}$ in. for the wire edge, and $\frac{3}{16}$ in. for a single edge. A 1-inch lap for riveting must be added to the length. This lap must be so notched that it will not interfere with the wire, which is placed in position before the rim is formed into a cylinder.

Pattern for the Handle.—Any straight line, Fig. 122, may be used as a line of stretchout. The profile of the handle, Fig. 122, is divided into equal parts and the divisions lettered *A*, *B*, *C*, etc. These divisions are transferred to the line of stretchout. Perpendiculars to the line of stretchout are erected at points *A*, *B*, *K*, and *M*. Distances of $\frac{1}{2}$ in. and $\frac{1}{4}$ in. are set off on lines *B* and *K*, on each side of the line of stretchout. These intersections are connected by straight lines to form the body of the pattern. Lines *A* and *M* set off that part of the handle that laps and rivets to the cover, and should be notched as shown in Fig. 122. Rivet holes are located in the exact center of these laps.

40. Related Mathematics on Pitch Top Cover.—*Problem 20A.*—How much would 50 cone tops, shown in Fig. 118 (no rims or handles), weigh if made from No. 26 galvanized steel (.9062 lb. per square foot)? Add 25 per cent for waste.

Problem 20B.—What would be the weight of the cone top of a cover to fit over a 14″ garbage pail? Allow $\frac{1}{2}$″ clearance between pail and cover on all sides, making the diameter of the base of cone 15″, and the slant height 9″. Cover to be made of No. 26 galvanized steel.

Digitized by Google

Problem 21

VEGETABLE PARER

41. The Vegetable Parer.—Figure 124 shows an elevation of a vegetable parer which is in the form of a right cone cut by a curved plane.

The Elevation.—A "vertical" line which is to be used for the center line, or altitude of the cone, is drawn first. At right angles to the lower end of this line, the base of the cone is drawn. This base is to be $\frac{3}{4}$ in. long and is to have $\frac{3}{8}$ in. on each side of the center line of the cone. A distance of 17 in., which will locate the apex of the cone, is set off upon the center line. The apex and the ends of the base line are connected by the slant height lines. At an altitude of 4 in. a curve that cuts the cone, as shown in Fig. 124, is drawn in. This curve may be drawn to suit the ideas of the designer, and is in reality the miter line.

The Profile.—A whole profile, using extension lines to locate the view, is drawn. The profile is divided into twelve equal parts and each division numbered. Extension lines are carried from each division of the profile upwards to the base of the cone, and thence to the apex. Each one of these extension lines intersects the miter line at some point. Horizontal lines from each of the intersections of the miter line, Fig. 124, are drawn over to the slant height.

The Pattern.—The arc of the stretchout, Fig. 125, using the apex as a center and a radius equal to the slant height of elevation, is next drawn. The spacing of the profile is transferred to the arc of stretchout and the divisions numbered to correspond. From each of these points a measuring line of the stretchout is drawn to the apex. Starting at point 1 of the profile, the extension line should be followed up to the miter line, then horizontally to the slant height? With a radius equal to the distance from this point to the apex, and the apex as a center, a curved extension line should be drawn over into the stretchout until it intersects both lines that bear the number 1. (Is this procedure similar to that of parallel line drawing? Wherein does it differ?) In like manner, each intersection on the stretchout may be traced out. A curved line passing through these points will give the miter cut. A $\frac{1}{4}$-inch lap is added to one side of the pat-

Digitized by Google

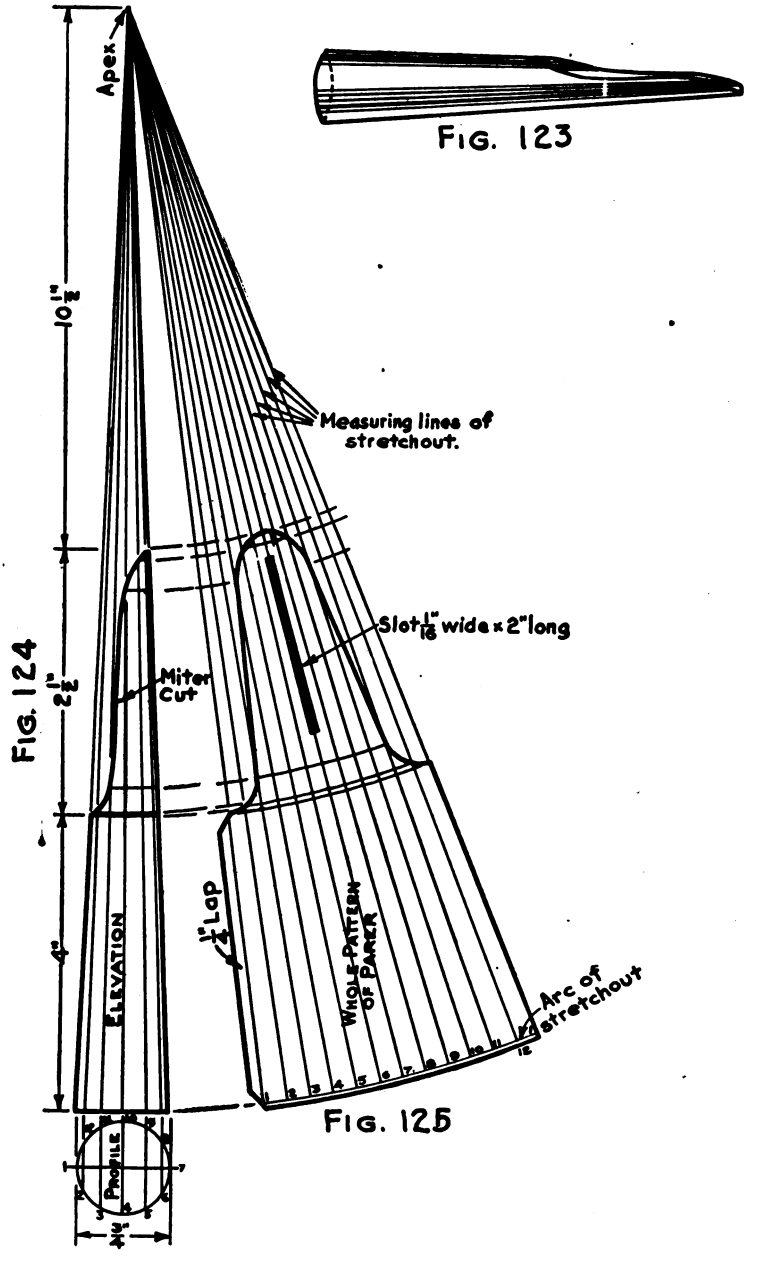

FIG. 123

FIG. 124

FIG. 125

FIGS. 123–125.—Vegetable Parer.

Digitized by Google

tern as shown in Fig. 125. A $\frac{1}{8}$-inch hem should be added below the arc of stretchout. The slot for paring purposes is laid out on line 7. Starting $\frac{1}{4}$ in. from the small end, a distance of two inches is laid off on line 7. The slot being $\frac{1}{16}$ in. wide will require $\frac{1}{32}$ in. on each side of line 7. One edge of the slot is slightly raised, after the parer is formed, and then filed to a cutting edge.

Digitized by Google

Problem 22

CONICAL ROOF FLANGE

42. The Conical Roof Flange.—Whenever a smoke pipe is to pass through a roof, it is necessary that a hole much larger than the pipe be cut in the roof in order to lessen the fire risk. In order to render this construction water-tight, a conical roof flange, as shown in Fig. 126, must be used.

The Elevation.—First, the roof line is drawn at the angle demanded by the job specifications (in this drawing 30°). The roof line immediately becomes the miter line. Next, a "vertical" center line, line 4 in Fig. 127, is drawn in. Upon each side of this center line a distance equal to one-half the diameter of the smoke pipe is set off. A short horizontal line is put in to represent the joint between the pipe and the flange. One-half the diameter of the hole in the roof is set off on each side of the vertical center line. This will locate the low point (point 7) of the miter line. From this point the base of the cone should be drawn at right angles to the center line. The slant height lines may now be drawn by connecting the ends of the base and the ends of the short horizontal line of the junction between the flange and pipe. These lines must be prolonged until they meet at the apex.

The Profile.—A half-profile, Fig. 127, is drawn and divided into equal spaces. The divisions are numbered and an extension carried upwards from each division as far as the base of the cone. From each intersection thus obtained, extension lines are drawn to the apex of the elevation. Where these extension lines cross the miter line, numbers that correspond to the numbering of the profile are placed. Horizontal extension lines from each intersection of the miter line are drawn over to the right-hand slant height line.

The Pattern.—With the apex of the elevation as a center, and a radius equal to the slant height of the full cone, the arc of stretchout is drawn. The spacing of the profile is transferred to this line, and the number of spaces doubled to provide for a whole pattern. The divisions are numbered to correspond. The measuring lines of the stretchout are drawn from each division of the arc of stretchout to the center point (apex).

Starting from point 1 of the profile, the extension lines are

Digitized by Google

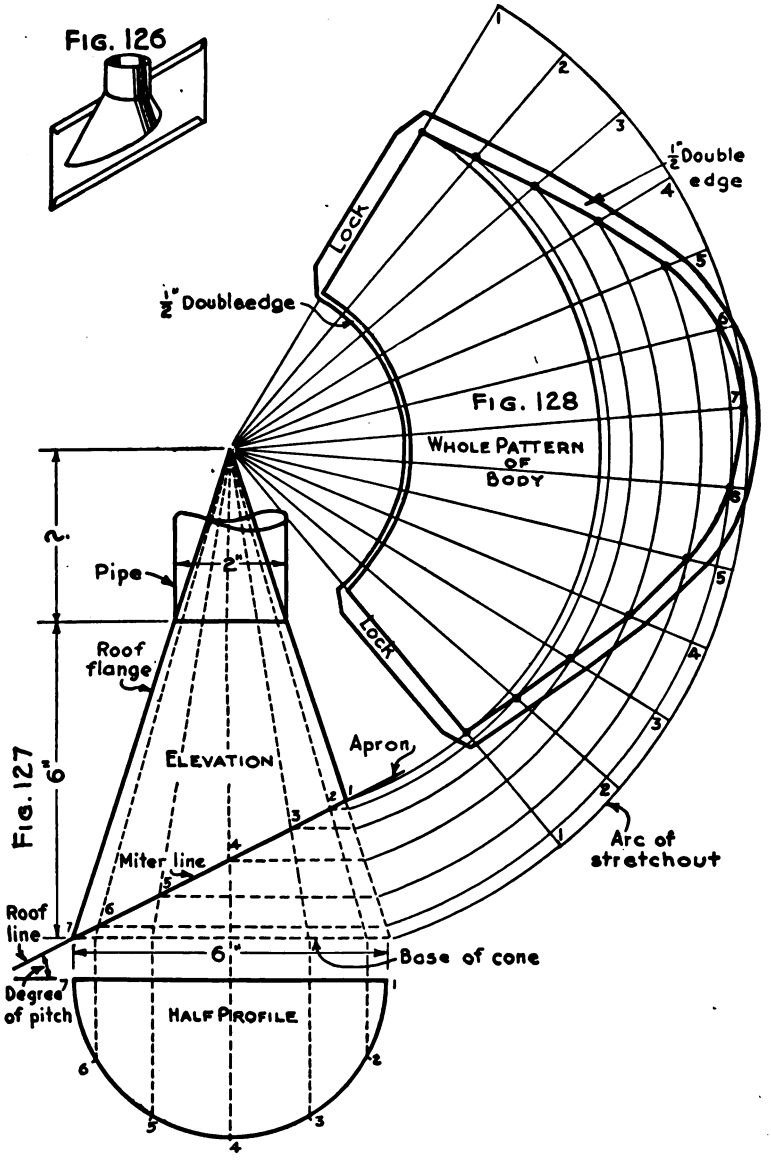

FIGS. 126–128.—Conical Roof Flange.

Digitized by Google

traced to the base of the cone, then to the miter line. With a radius equal to the distance from this point to the apex, and with the apex as a center, a curved extension line intersecting lines 1 and 1 of the stretchout is drawn. From point 2 of the profile, the extension line is traced to the base of the cone, then to the miter line, and thence horizontally to the slant height line. With a radius equal to the distance from this point to the apex, and with the apex as a center, a curved extension line intersecting lines 2 and 2 of the stretchout is drawn. In like manner, the remaining intersections of the stretchout may be traced. A curved line passing through these points will give the miter cut of the roof flange at the roof line. The upper miter line, being parallel to the base, is developed like an ordinary right cone. With a radius equal to the slant height, a curved extension line passing through the stretchout is first drawn. The necessary allowances for locks parallel to lines 1 of the stretchout are added. One-half inch double edges to the upper and lower miter cuts of the pattern are also added to allow for joining to the pipe and apron.

43. Related Mathematics on Conical Roof Flange.—*Area of Frustum.*—If a right cone is cut by a plane parallel to that of the base, the top section will still be a right cone although of small dimensions, and the lower part will be a frustum of a cone. The profiles of both bases, or ends, will be circles. The smaller circle is generally called the upper base, and the larger circle the lower base of the frustum. The lateral area of a frustum of a cone is found by adding together the circumferences of the upper and lower bases, dividing the sum by 2, and then multiplying by the slant height. This is often expressed as a formula for area of a frustum:

$$A = \frac{B+b}{2} \times H_s$$

in which

B = Circumference of lower base
b = Circumference of upper base
H_s = Slant height of frustum

A frustum whose lower base has a circumference of 40″ and

Digitized by Google

whose upper base has a circumference of 22″ will have a surface area of

$$\frac{40+22}{2}\times 16 = 496 \text{ sq. in.}$$

if the slant height of the frustum is 16″.

Also, a frustum having an upper base diameter of 8″, a lower base diameter of 12″, and a slant height of 10″ will have a surface area of:

Circumference of upper base = $8''\times 3.1416 = 25.133''$

Circumference of lower base = $12''\times 3.1416 = 37.669''$

Formula, $A = \frac{B+b}{2}\times H,$

Substituting, $A = \frac{37.699''+25.133''}{2}\times 10$

$A = 314.16$ sq. in.

Problem 22A.—The roof flange, Fig. 126, would be treated by any estimator as a frustum of a right cone, although in reality its surface area is less. The estimator would take the diameters of the upper and lower bases from the elevation, Fig. 127, calling the upper base 2″ and the lower base 6″ in diameter. How much would the conical part of this roof flange weigh if it were made from No. 26 galvanized iron?

Digitized by Google

Problem 23

APRON FOR A CONICAL ROOF FLANGE

44. The Apron for a Conical Roof Flange.—When any solid is cut by a plane that is inclined to the plane of the base, the shape or section thus formed is not the same as the profile of the base.

The Elevation.—The elevation of the roof flange used in Problem 22 can be reproduced.

The Pattern.—Any straight line, Fig. 130, may be drawn and the exact spacing of the miter line set off upon it. Perpendicular measuring lines, Fig. 130, are erected through each point and are numbered to correspond to the miter line.

Returning to the elevation, Fig. 129, an extension line is dropped from point 1, down to the horizontal center line of the half-profile. From point 2 of the miter line, the horizontal extension line is followed over to the slant height. From this point, a perpendicular to the horizontal center line of the profile is dropped, and with one point of the compass on the center of the profile, this line is extended by an arc until it strikes a radial line from point 2 of the profile at the point *B*.

The perpendicular distance from point *B* to the horizontal center line should be measured and placed on each side of the line of stretchout, Fig. 130, on measuring line number 2. In like manner, points *C*, *D*, *E*, and *F* are located and their distances placed on measuring lines 3, 4, 5, and 6 respectively. A curve traced through the points thus obtained will give the shape of the hole in the apron as well as that of the hole to be cut in the roof.

A rectangle representing the shape of the apron should be drawn, allowing a space of at least 6 in. "up the roof," and at least 3 in. on the other sides. A hem should be added to three sides to turn or direct the flow of any roof water that might leak in. A $\frac{3}{16}$-inch single edge should be allowed around the inside of the hole, in order to double seam the body to the apron.

Digitized by Google

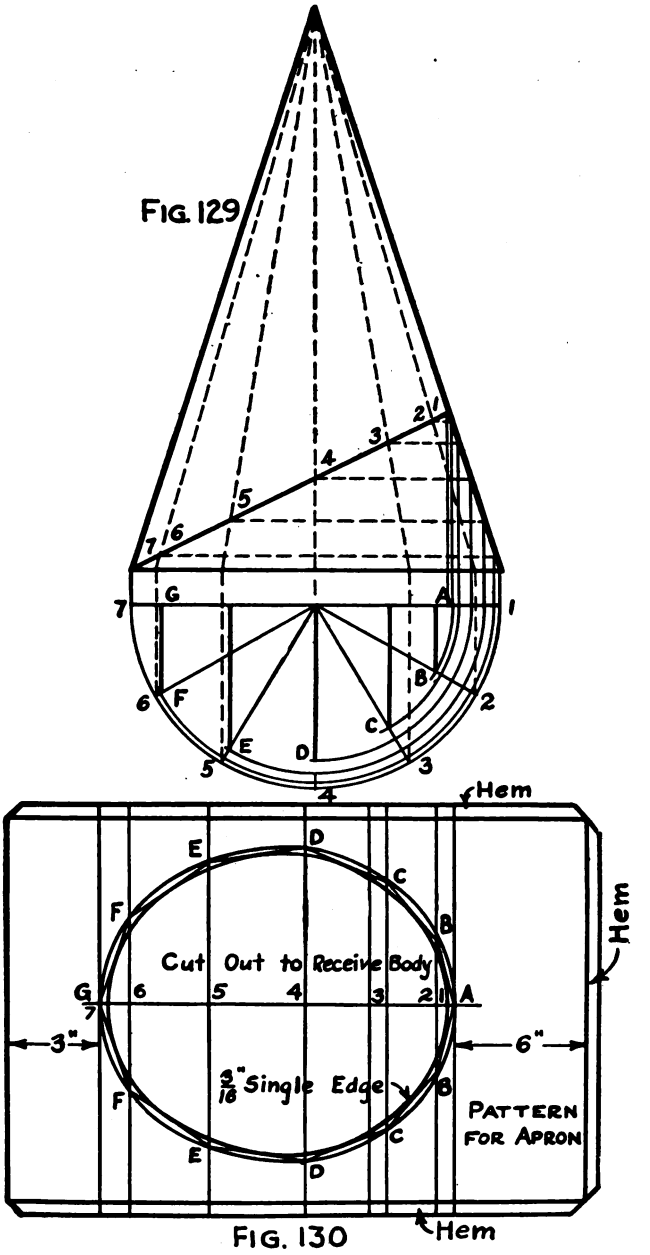

FIGS. 129–130.—Apron for Conical Roof Flange.

Digitized by Google

CHAPTER VI

INTERSECTING RECTANGULAR PRISMS

Prob No.	JOB	DRAWING OBJECTIVE	MATHEMATICAL OBJECTIVE
24	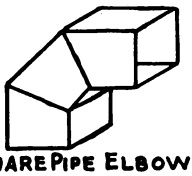 SQUARE PIPE ELBOW	Principles of Development.	Areas of Rectangles and Triangles.
25	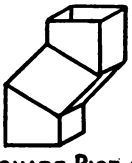 SQUARE PIPE OFFSET	Drawing the Miter Lines.	Area of Parallel-ograms
26	DIAGONAL OFFSET IN SQUARE PIPE	Idea of Offset Pipe standing on edge.	Idea of Parallel ograms and Weight of Fitting
27	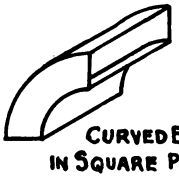 CURVED ELBOW IN SQUARE PIPE	Methods of Construction.	Area of Cylindrical Wings and Solids of Revolution

Objectives of Problems on Intersecting Rectangular Prisms.

Digitized by Google

Problem 24

THREE-PIECE RECTANGULAR ELBOW

45. The Three-piece Rectangular Elbow.—This problem deals with a three-piece, 90° elbow, Fig. 131, having a throat radius of $4\frac{1}{2}$ in. Looking at the elevation of this elbow, Fig. 132, one would be unable to tell whether the fitting was round or rectangular piping. The profile shows that the elevation is of a rectangular pipe elbow.

The Elevation.—First, an angle of 90°, one side of which is to be used as the base line of the elbow, is drawn. From the vertex of the angle, distances of $4\frac{1}{2}$ in. and $2\frac{1}{2}$ in., as shown in Fig. 132, are set off. The arc of the throat and the arc of the back are drawn, using the vertex of the angle as the center of the elbow. The arc of the back is divided into four equal parts. Miter lines are drawn through the first and third divisions of the arc, above the base line. The elevation is completed by drawing straight lines tangent to the arcs. The detailed description of an elbow elevation is given in Problem 10, Chapter III.

The Profile.—A profile, Fig. 133, is drawn, using extension lines to locate the view properly. Each corner of the profile is numbered. It should be remembered that the seam always occurs at number 1 in the profile. In this case the seam comes at one corner of the elbow. Many prefer to have the seam at the center of one of the sides, or faces, of the elbow.

The Patterns.—Three lines of stretchout, one at right angles to each piece of the elbow, must be drawn. The spacing of the profile is transferred to each line of stretchout and is numbered to correspond. Measuring lines are drawn through each point in the lines of stretchout. Starting at point 1 of the profile an extension line should be traced upwards to the miter lines, and from there an extension line to lines 1 of the stretchouts should be drawn. Notice that two stretchouts are served by each intersection of the miter line. Extension lines from the elevation into any stretchout must always be drawn at right angles to the sides of the pipe. In like manner intersections of the stretchouts can be located and the patterns completed by drawing straight lines between these points as shown in Figs. 134, 135, and 136. Three-sixteenths inch single edges and $\frac{3}{8}$-inch double edges, as shown, join the pieces of the elbow by double seaming.

Digitized by Google

46. Related Mathematics on Elbows.—*Solids of Revolution.*—All elbows may be treated mathematically as solids of revolution.

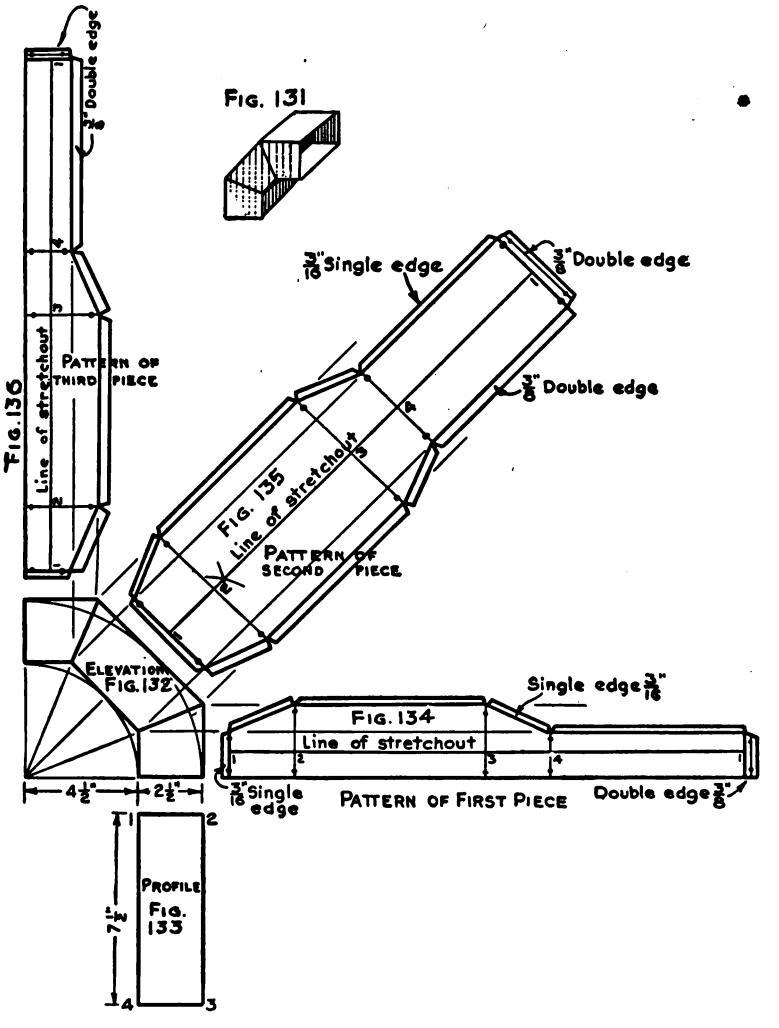

FIGS. 131–136.—Three-piece Rectangular Elbow.

Any surface moving about a fixed point will generate a solid of revolution. Suppose a piece of round rod is formed in the rolls to a true circular profile. A solid of revolution would be created

Digitized by Google

because a ring slipped over the rod and caused to move around it to the right or to the left would always be the same distance from the center of the profile to which the rod was formed. A piece of bar iron formed to a circular profile would also be a solid of revolution. This solid could be regarded as being generated by a rectangle revolving about a center point. Figure 132 is drawn around two arcs whose center is the center of the elbow. It can also be seen that the more pieces "put in" the elbow, the nearer the straight lines come to the arcs about which they are drawn. If the elbow were made of a very great number of pieces, these would become so much like arcs that they could hardly be distinguished from them. This or any other elbow can be treated as a solid of revolution.

Solids of Revolution Have Three Diameters.—Every solid of revolution may be considered as having three diameters. The radius of the throat of Fig. 132 is $4\frac{1}{2}''$. If four of these elbows were joined so as to make a complete ring, it would have a diameter of $4\frac{1}{2}'' \times 2$, or $9''$. This would be the inside diameter of the solid of revolution. The radius of the back, Fig. 132, is $4\frac{1}{2}'' + 2\frac{1}{2}''$, or $7''$. The corresponding diameter for the whole ring would be $7'' \times 2$ or $14''$. This would be the outside diameter of the solid of revolution. The third diameter is twice the center line radius of the elbow. In Fig. 132 the center line radius is $5\frac{3}{4}''$, and for the whole ring this would be $5\frac{3}{4}'' \times 2 = 11\frac{1}{2}''$. This is called the neutral diameter of the solid of revolution, because when any rod or bar is formed into a circular profile the metal near this line stands still, that outside of the line stretches, and that inside of the line shrinks a like amount. This can be proved by drawing straight lines on a pencil eraser and bending the eraser, at the same time noting the distances between the lines.

Rule for Surface Area.—The surface area of a solid of revolution is equal to the circumference of its right section (profile) multiplied by the length of its neutral zone (diameter of the neutral $\times 3.1416$).

Sample Problem.—What is the surface area of the elbow shown in Fig. 132?

Outside diameter of ring $= 14''$
Inside " " " $= 9''$.
Neutral " " $= 11\frac{1}{2}''$.
Length of neutral zone $(11\frac{1}{2}'' \times \pi) = 36.128''$.
Perimeter of right section (length of line of stretchout) $= 20''$.

Digitized by Google

Surface area of entire ring $36.128'' \times 20'' = 722.56$ sq. in.

Surface area of elbow (90° or $\frac{1}{4}$ of entire ring) 722.56 sq. in. $\div 4$ = 180.64 sq. in.

Ans. 180.64 sq. in.

Problem 24A.—A 90° elbow to fit a rectangular pipe $7'' \times 12''$ has a $10\frac{1}{2}''$ throat radius. What is its surface area?

Problem 24B.—A 60° elbow ($\frac{1}{6}$ of the solid of revolution) to fit a rectangular pipe $30'' \times 61''$ has a throat radius of 17". What is its surface area?

Digitized by Google

Problem 25

RECTANGULAR PIPE OFFSET

47. The Rectangular Pipe Offset.—As was pointed out in the preceding problem, the elevation of a fitting for rectangular piping presents much the same appearance as an elevation for a round pipe fitting. For this reason the description given below will answer equally as well for an offset in round piping, the only difference being the shape of the profile.

The Profile.—A profile, as shown in Fig. 138, using the dimensions given, should be drawn. Each vertex (corner) of the profile should be numbered. Extension lines are carried upwards from points 2 and 3.

The Elevation.—A base line *AH* in Fig. 137 should be drawn equal in length to line 2–3 of the profile. A perpendicular 3 inches high should be erected at point *A*. The upper point of this line should be lettered *B*. The line *BC* is drawn according to the dimensions given in Fig. 137. The 3-inch dimension gives the fitting its name, it being the amount that the third piece sets off to one side of the first piece of the elbow. The line *CD* is drawn at right angles to the base line. This completes the outline of one side of the elevation. The miter line *BG* must next be drawn. Every miter line of an elbow bisects the angle formed by the adjacent sides of the pipe. Therefore, in order to get the miter line *BG* the angle *ABC* must be bisected.

The procedure for bisecting an angle is as follows: With *B* as a center and any radius, set off equal distances on each side of the point *B*, on lines *AB* and *BC*. Letter these points *P* and *R*. With *P* and *R* as centers and any radius greater than *RB*, draw intersecting arcs (to the right of the figure). Letter this intersection *J*.

The straight line *BJ* will bisect the angle and can be used as the first miter line of the fitting. A perpendicular is erected at the point *H* until it cuts the miter line at the point *G*, Fig. 137. The next line to be drawn is *FG*.

In order to draw the line *FG* the angle *HGB* must be copied. This is done as follows: With *G* as a center and any radius, draw an arc cutting line *HG* at the point *K* and also cutting the miter line at the point *M*. With *M* as a center and a radius equal to

Digitized by Google

MK, set off a distance equal to *MK* on the other side of the miter line. Letter this point *N*. The straight line *GN* will form the angle *NGB*, which will exactly equal the angle *HGB*. Make the line *GF* equal in length to line *BC*. Draw the line *CF*, which is the second miter line of the elevation.

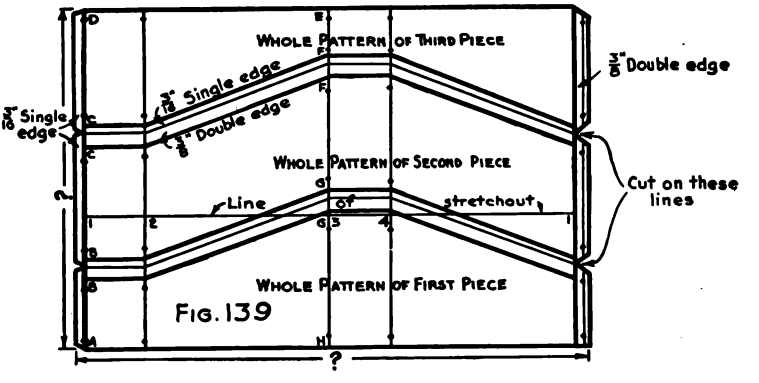

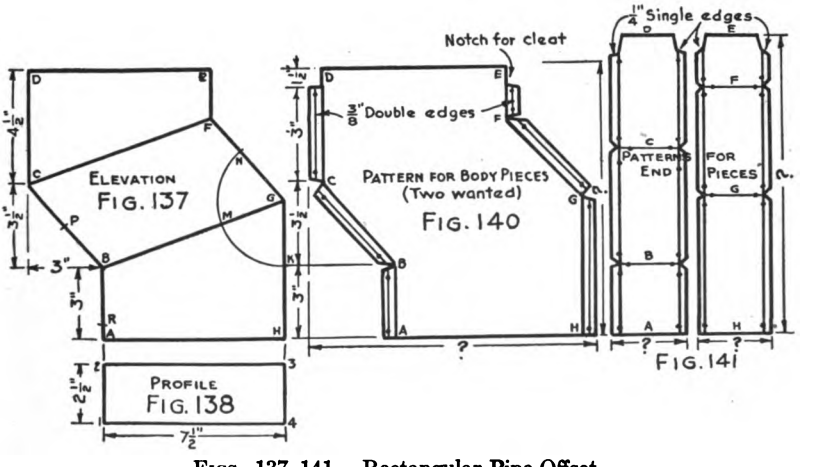

FIGS. 137–141.—Rectangular Pipe Offset.

The elevation is completed by drawing lines *DE* and *EF*.

The Pattern.—There are two methods of construction in general use in shop practice. One method calls for each piece to be developed separately, Fig. 139, the other calls for the body of the fitting to be made as shown in Fig. 140, the ends being "double seamed in." Figure 139 shows the patterns for the offset laid out in

Digitized by Google

such a manner that no stock will be wasted. The measurements for the several pieces are taken from the elevation and are plainly marked. The pattern for the body piece, Fig. 140, is obtained by adding 3-inch double edges to the front elevation, and notching for a $1\frac{3}{8}$-inch cleat as shown. The stretchout for the end piece is determined from the front elevation, and the width from the profile. Single edges $\frac{1}{4}$ in. wide are added to each side. The top is notched for a $1\frac{1}{2}$-inch cleat.

48. Related Mathematics on Rectangular Pipe Offset.—*Problem 25A.*—How much would the stock cost for four rectangular pipe offsets, Fig. 137, made from No. 24 galvanized steel (1.156 lb. per square foot) if the steel cost \$8.75 per 100 lb.?

Problem 25B.—How much more would the stock cost for the patterns shown in Fig. 140 than those shown in Fig. 139? Stock cut from body pattern corners would be regarded as waste.

Digitized by Google

Problem 26

DIAGONAL OFFSET

49. The Diagonal Offset.—This type of fitting is used in ventilating and heating ducts. It is also frequently encountered in running rectangular copper conductor pipes. The elevation shows a section of a lintel cornice such as is frequently seen above the first floor windows of a building. A conductor pipe running down an inside corner of a building having a lintel cornice would have to be offset diagonally in order to clear the obstruction.

The Plan.—Figure 142 shows the outline of a conductor pipe (lines *AB*, *BC*, and *CD*). The entire elevation is not shown because it plays no part in the development. The plan, Fig. 143, is drawn making the angle equal to 45°. If the required angle is other than 45°, it presents an entirely different problem and cannot be drawn by this method. The profiles are numbered as shown. Profile 1, 2, 3, and 4 is that of the lower part of the fitting and profile 5, 6, 7, 8, that of the upper part. While both are the same size their numbering must be different.

Diagonal Elevation.—A base line for the diagonal elevation must be drawn parallel to the line 4–8 of the plan. Extension lines are carried from each point in both profiles at right angles to this base line. Extension lines from points 1 and 3 will locate points *A* and *E* on the base line. A perpendicular is erected at point *A* and the distance *AB* set off equal to *AB* of the elevation, Fig. 142. The extension line from point 5, of Fig. 143, will locate points *C* and *D* in Fig. 144, heights being taken from Fig. 142. Drawing the line *BC* will complete the outline of that part of the fitting that rests directly upon the lintel cornice. A perpendicular is now erected at point *E* of Fig. 144. With *B* as a center and a radius equal to *AE*, an arc is drawn as shown in Fig. 144. Any other point *F* on the line *CB* is selected and another arc of the same radius drawn. The line *HG* must be drawn tangent to both arcs. The point *G* occurs at the intersection of this tangent and the extension line from point 3 of Fig. 143. Line *GH* should be equal in length to *BC*. At the point *D* a line is drawn at right angles to line *CD*. This line will intersect the extension line from point 7 of Fig. 143. The intersection should be lettered *K*. A straight line *KH* will complete the outline of the diagonal

Digitized by Google

elevation. The miter lines *BG* and *CH* should be drawn in. The solid and dotted lines representing the other edges of the pipe are located by extension lines running from points 2, 4, 6, and 8 of

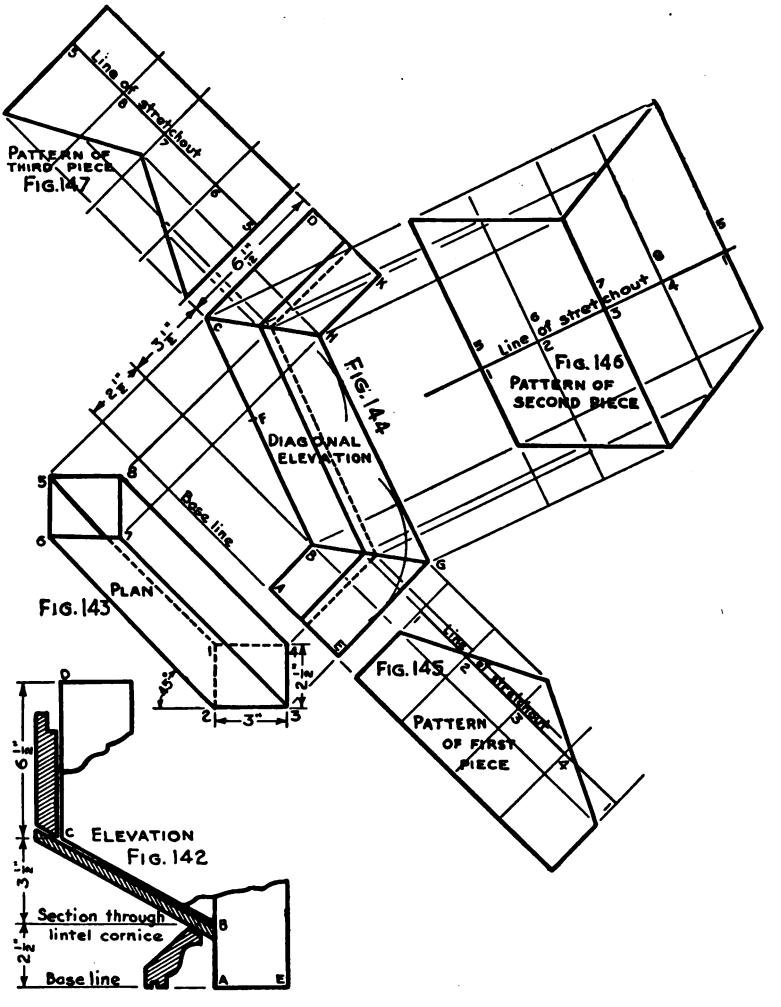

FIGS. 142–147.—Diagonal Offset.

Fig. 143. The patterns are drawn in the manner described in Problem 25.

Locks are purposely left off of the patterns in order to avoid

Digitized by Google

a confusion of lines. It is recommended to the student that he make paper or metal models of this problem in order to understand thoroughly the basic principles involved.

50. Related Mathematics on Diagonal Offsets.—*Problem 26A.*—Sixteen-ounce cold-rolled copper costs $25\frac{1}{4}$ cents per pound. How much would twenty-four diagonal offsets, Fig. 144, cost? In finding the area of this fitting multiply the distance (perimeter) around the profile by the combined length of lines *AB*, *BC*, and *CD* of Fig. 142. Sixteen-ounce copper weighs 16 ounces to the square foot. Allow 5 per cent for locks.

Digitized by Google

Problem 27

CURVED ELBOW IN RECTANGULAR PIPE

51. The Curved Elbow in Rectangular Pipe.—This type of fitting is extensively used in ducts for heating and ventilating systems because it offers a minimum of friction to the moving air. The elbow discussed here has an angle of 90°.

The Profile.—A plan or profile, Fig. 148, is drawn according to the dimensions given. The corners are lettered, and extension lines are carried upwards from points A and D to locate the elevation properly.

The Elevation.—After a base line is drawn, points 1 and 12 are located, and a distance of $3\frac{3}{4}$ in. (to scale) set off to the left of point 1 to serve as the center point of the elbow. The limits of the elbow are defined by erecting a perpendicular at this point. The arcs of the throat and the back are drawn. These arcs are divided into equal spaces and are numbered as shown.

The Pattern.—The pattern for the body, Fig. 150, is a copy of the elevation. To this is added a $\frac{1}{4}$-inch single edge on the throat and back. A $1\frac{1}{2}$-inch edge for "shipping" the pipe is added as shown. Figure 151 shows the pattern of the throat piece which is a rectangle whose width is equal to line AB of plan, and whose length is equal to the stretchout of the spacing of the arc of the throat, Fig. 149. To this rectangle must be added $1\frac{1}{2}$ in. for "shipping" and to each long side a $\frac{9}{16}$-inch edge for a hammer lock. Figure 152 differs from Fig. 151 only with regard to its length, which is taken from the stretchout of the arc of the back.

The Hammer Lock.—The hammer lock is so called because it can be made up on the job, the only tool required being a hammer. Straight strips of metal are formed in the brake, to act as the sides of the fitting as shown in Fig. 153. The $\frac{1}{4}$-inch single edges of the body are worked up to a right angle and slipped into the slot of the hammer lock. The protruding edge is then closed down with a hammer as shown in Fig. 154. This gives the job an appearance of being double seamed, and requires much less time and effort than the double seamed job.

52. Related Mathematics on Curved Elbows.—*Problem 27A.* —How much would three curved elbows, Fig. 149, weigh, made from No. 28 galvanized iron (.7812 lb. per square foot), allowing 20 per cent for waste?

Digitized by Google

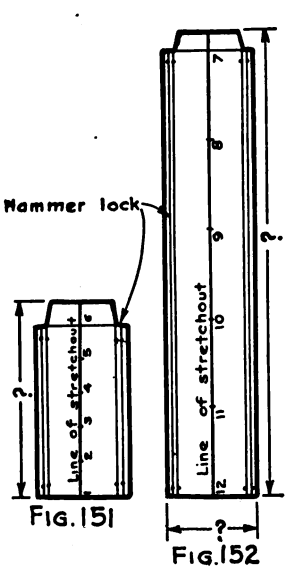

FIG. 151

FIG. 152

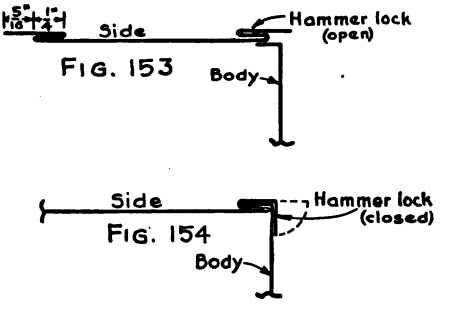

FIG. 153

FIG. 154

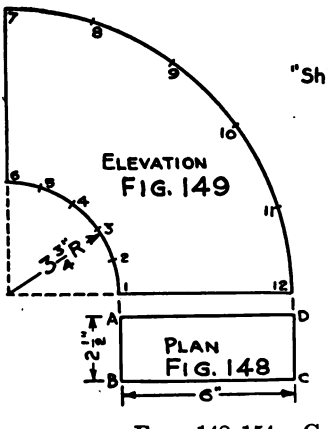

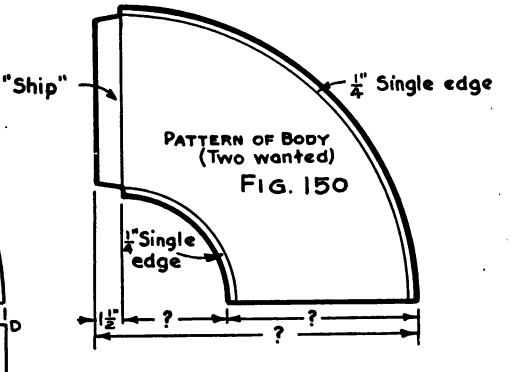

FIGS. 148–154.—Curved Elbow in Rectangular Pipe.

Digitized by Google

Digitized by Google

CHAPTER VII

PLANNING FOR QUANTITY PRODUCTION

Prob. No.	JOB	DRAWING OBJECTIVE	MATHEMATICAL OBJECTIVE
28	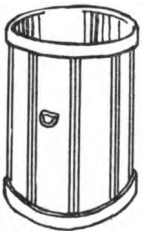 ASH CAN.	Detailing operations for routing through the shop as piecework. Standard construction.	Estimatings costs.

Objective of Problem on Quantity Production

Digitized by Google

Problem 28

ASH BARREL

53. Planning for Quantity Production of an Ash Barrel.—In planning for quantity production, a draftsman must consider every item that has to do with the manufacturing processes to be carried on in the shop. In order to do this intelligently he should make a list of these items similar to the one given below:

1. Dimensions of barrel
2. Type of hoop to be used
3. Blank for body:
   - *a.* Weight of material
   - *b.* Height after deducting hoops
   - *c.* Riveted or locked seams
4. Weight of bottom
5. Type of slat to be used
6. Number of slats required
7. Sizes of rivets required:
   - *a.* For attaching slats
   - *b.* For attaching upper rim
   - *c.* For attaching lower rim and bottom
8. Pattern for body:
   - *a.* Over-all dimensions
   - *b.* Allowance for lock
   - *c.* Locating rivet holes for slats
   - *d.* Locating rivet holes for upper hoop
   - *e.* Locating rivet holes for lower hoop
9. Pattern for upper hoop and lower hoop:
   - *a.* Length of blank required
   - *b.* Method of joining ends
   - *c.* Spacing rivet holes
10. Pattern for bottom:
    - *a.* Allowance for flanging
11. Pattern for slat:
    - *a.* Miter cut
    - *b.* Size and location of rivet holes
    - *c.* Size of wooden core
12. Order in which parts are assembled

Dimensions of Barrel.—The dimensions of the barrel would vary according to whether the job was standard, or special size. Different manufacturers have established their own standards. The sizes given below are common to all, and are best adapted to ordinary needs. A barrel 18 in. in diameter by 26 in. high will be treated in this discussion.

Digitized by Google

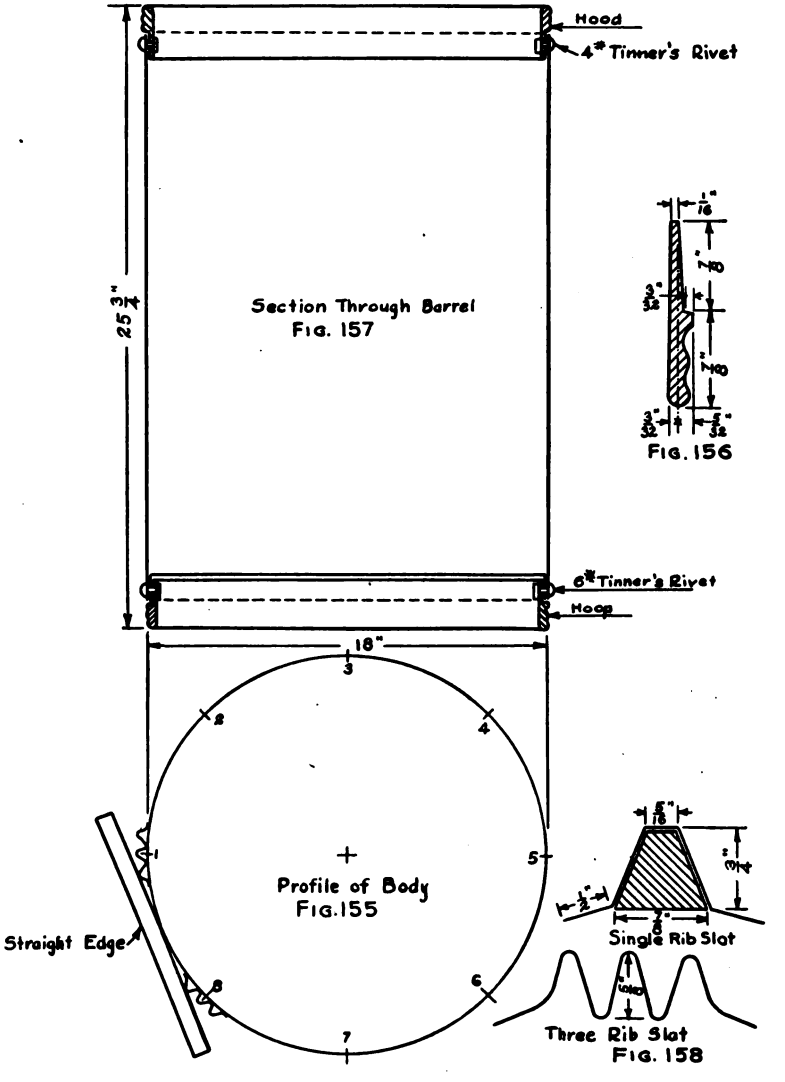

FIGS. 155–158.—Galvanized Ash Barrel.

Digitized by Google

STANDARD DIMENSIONS FOR GALVANIZED ASH BARRELS

Diameter in Inches	Height in Inches	Approximate Capacity
24	36	72 gallons
20	26	34 "
18	26	28 "
17½	26	24½ "
14	26	16 "

Type of Hoop.—There are several types of hoops that can be obtained from the jobber. Figure 156 gives a full size cross section of the one generally used.

Blank for Body.—The body of the ash barrel is made from No. 24 galvanized steel. The top and bottom hoops fit into the barrel one-half of their entire width, Fig. 157; therefore, the body blank must be $\frac{7}{8}$ in. $\times 2$ or $1\frac{3}{4}$ in. less than the total height of the barrel. This would make the blank $24\frac{1}{4}$ in. wide, but in order to use the sheet metal as it comes from the mill the total height would be reduced to $25\frac{3}{4}$ in., Fig. 157, and stock size sheets 24 in. wide used to make the body. The riveted seam is somewhat stronger, but since the lock seam can be placed under a slat and protected, it is generally used because it can be made more cheaply.

Weight of Bottom.—The bottom of the barrel should be at least four gages heavier than the sides.

Type of Slat.—Figure 158 shows two types of slats in common use. The three-rib slat is made of No. 24 galvanized steel by means of special machinery. The single-rib slat may be made on an ordinary cornice brake and used with or without the wooden core.

Sizes of Rivets.—In riveting the slats to the barrel, the rivets must pass through two thicknesses of No. 24 gage. This will require a $2\frac{1}{2}$ lb. rivet. The rivets for the upper hoop must pass through one thickness of No. 24 gage iron and $\frac{3}{32}$ in. of steel in the hoop. This will require a 6 lb. rivet. The rivets for the bottom hoop must pass through one thickness of No. 24 gage (the body), one thickness of No. 20 gage (the bottom), and $\frac{3}{32}$ in. of steel in the hoop. This will require an 8 lb. rivet.

Drawing the Section.—A section, Fig. 157, showing the hoops, body, and bottom in their proper positions, should be drawn.

Digitized by Google

The Profile.—The profile of the body should be drawn. The profile of the hoops would be larger than that of the body, but since the pattern for the body and the location of the slats are to be obtained, the profile of the body must be dealt with. This profile is divided into eight equal parts, Fig. 155. Using any two divisions of the profile as centers, the two slats are drawn in their proper positions. The profile, Fig. 155, shows the three-rib slat, but a single-rib slat may be drawn in. A straightedge laid across the slats, in the manner shown in Fig. 155, should clear the body of the barrel; otherwise, the slats will not protect the body when in contact with the edge of the ash cart. If the straightedge touches the profile, the slats must be made larger or spaced more closely together.

Pattern for the Body.—A line of stretchout, Fig. 159, should be drawn and the spacing of the profile transferred to it, with numbers to correspond. Measuring lines are drawn through each division of the stretchout. One-half inch locks are set off on each end of the pattern. The top and bottom lines of the pattern are drawn 24 in. apart. A distance of $\frac{7}{16}$ in. should be measured in from the top and the bottom lines. These lines will serve as center lines for the rivet holes of the hoops and slats. From Fig. 158 the distance from center to center of the $\frac{1}{2}$-inch edge of the single-rib slat is found to be $1\frac{3}{8}$ in. This will also be the distance between centers for rivet holes in the body. One-half of this distance, $\frac{11}{16}$ in., is placed on each side of every measuring line in the stretchout. It should be indicated on the drawing that these are to be punched for $2\frac{1}{2}$ lb. rivets. Another line running horizontally through the center of the pattern should bear the same spacing for riveting the center of each slat. The rivet holes for the upper and lower hoops are located midway between measuring lines 1 and 8, 7 and 6, 5 and 4, 3 and 2 as shown in Fig. 159. This allows for four rivets. Therefore, the distance between centers for each pair of rivets will be one-fourth of the circumference. In order to avoid riveting through the seam, the first hole is spaced $\frac{1}{16}$ of the circumference, and the last hole $\frac{3}{16}$ of the circumference away from the circumference line No. 1 of the stretchout. The rivet holes for the drop handles should be placed at $\frac{2}{3}$ of the height of the barrel as shown, Fig. 157.

Upper and Lower Hoops.—The upper hoop must be fitted inside of the body. In order for the hoop to go inside, some allowance

Digitized by Google

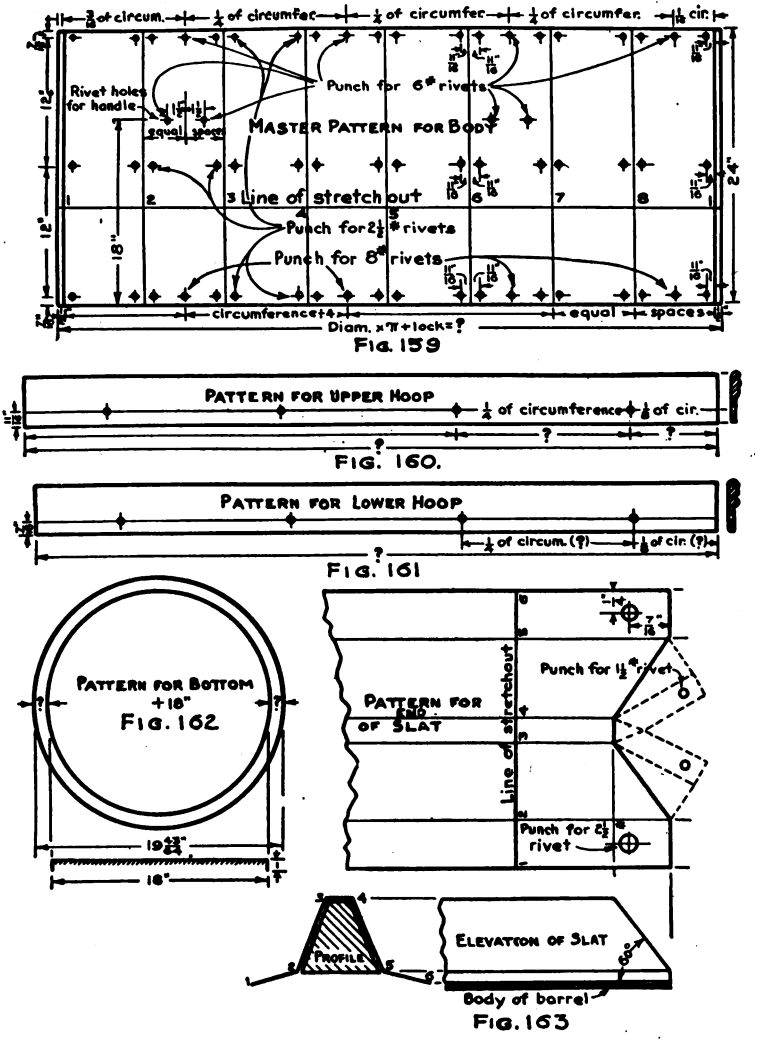

FIG. 159

FIG. 160.

FIG. 161

FIG. 162

FIG. 163

FIGS. 159–163.—Drawings for Patterns of Ash Barrel.

Digitized by Google

must be made for the thickness of the metal. Figure 156 shows a "dot and dash" line. This line is called the neutral axis, and takes its name from the fact that the metal at this point remains stationary while that on either side stretches or shrinks as the hoop is formed up. It will also be noticed that this line is not in the center as it would be if the cross-section were rectangular in shape. According to Fig. 156, this line passes the "square corner," against which the top of the body rests, at a distance of $\frac{5}{32}'' - \frac{3}{32}''$, or $\frac{1}{16}''$. The rule is to double this quantity and add one thickness of the metal body. Following this rule would give $\frac{1}{16}'' + \frac{1}{16}'' + .025'' = .150''$ or $\frac{5}{32}''$ (nearly). This should be subtracted from the diameter of the body ($18'' - .15'' = 17.85''$) and the remainder multiplied by π, in order to get the length of the blank for the upper hoop, Fig. 160. This would give $17.85'' \times 3.1416 = 56.077''$, for the length of Fig. 160. The pattern for the lower hoop, Fig. 161, must be shorter than that for the upper hoop, because the lower hoop must go inside of the bottom of the barrel as well as the body, Fig. 157. Using the rule given above:

$$\text{Diam.} 18'' - \begin{pmatrix} 1 \text{ thickness body} \\ .025 \end{pmatrix} + \begin{pmatrix} 1 \text{ thickness bottom} \\ .037 \end{pmatrix} + \begin{pmatrix} \text{allowance for hoop} \\ .125 \end{pmatrix} \times \pi \times 3.1416 = \text{length of blank for lower hoop (Fig. 161)} \quad 55.95''$$

Since the ends of the hoops are to be butt-welded no allowance need be made for joining. There are to be four rivets in each hoop; therefore, the distance between the rivet holes on centers would be equal to one-fourth of the circumference. Placing half of this space, or $\frac{1}{8}$ of the circumference, at each end would avoid a rivet hole through the weld. The spacing of the rivet holes in Fig. 160 will not be the same as that in Fig. 161, because of the difference in length of the blanks.

Pattern for the Bottom.—The bottom of the barrel has a $\frac{7}{8}$-inch flange turned for riveting to the body. This flange can be worked up by hand, but it is generally pressed in a machine. Figure 162 shows a section of the bottom, and the pattern with allowance for flanging. If $\frac{7}{8}$ in. were added to each side of the diameter of the finished bottom, the machine would turn a flange deeper than $\frac{7}{8}$ in. The rule for finding the correct diameter of the pat-

Digitized by Google

tern is: *Find the total surface area of the finished piece and convert this area into disc inches.* Applying this rule,

$$\text{Diameter}^2 \times .7854 = (18'')^2 \times .7854 = \text{area of bottom} = 254.47 \text{ sq. in.}$$

$$\text{Circumference} \times \text{Height} = 18'' \times \pi \times 7/8 = \text{area of flange} = 49.48 \text{ sq. in.}$$

$$\text{Total or combined area} = 303.95 \text{ sq. in.}$$

$$\sqrt{\text{Area} \div .7854} = \sqrt{303.95 \div .7854} = \sqrt{387} = 19.67'', \text{ Diam. of pattern.}$$

The nearest fraction to .67 in. to be used would be $\frac{43}{64}$ in.; therefore, the diameter of the pattern for the bottom, Fig. 162, would be $19\frac{43}{64}$ in.

Pattern for Slat.—The top and bottom of the slat are "cut back" on an angle of 60° as shown in Fig. 163. An elevation showing the miter cut at a 60° angle should be drawn. Extension lines are carried from the profile to the miter line. A line of stretchout is drawn and upon it the spacings of the profile are set off. The measuring lines are drawn in. The intersections from each point in the profile are traced to the miter line, and thence to the corresponding line of the stretchout. These intersections are connected by straight lines to obtain the miter cut. If the wooden core is to be used, some means for closing the end must be provided to prevent the core from slipping out. If the proper machine is available, an end may be "pressed on" the metal slat. Another method is to provide laps as shown by the dotted lines on the pattern. These laps may be fastened by one rivet. Holes for riveting the slats to the barrel must be laid out to correspond exactly to the spacing of holes in the body pattern, Fig. 159.

Assembling the Barrel.—The body blanks are cut from sheets of No. 24 galvanized steel 24 in. wide by 120 in. long. Rivet hole centers are transferred from the master pattern, and holes are punched in each blank. Locks are then turned in the stovepipe folder, after which the body blanks are formed in the rolls and grooved in the grooving machine. The slats are riveted to the body. The upper hoop is then riveted on. The bottom and the lower hoop are then placed in the barrel and riveted in place. The drop

Digitized by Google

handles are attached to the barrel and it is then ready for final inspection.

54. Related Mathematics on Ash Barrel.—In order to estimate the cost of the article to be made by quantity production methods, each item must be considered separately.

Sample Problem.—Figure the cost of stock entering into the manufacture of 500 ash barrels such as shown in Fig. 157.

Item 1. Cost of 500 Body Blanks. Fig. 159.

Size of sheets 24″×120″, No. 24 gage
Area of sheet 20 sq. ft.
Number of sheets required—250 (2 bodies from each sheet)
Total area of 500 body blanks 250×20 = 5000 sq. ft.
Weight of No. 24 galv. steel per sq. ft. = 1.156 lb.
Total weight of bodies, 1.156×5000 = 5780 lb.
Cost of 500 bodies at 8.5¢ per lb. = $491.30

Item 2. Cost of 500 Bottom Blanks.

Size of blank = $19\frac{13}{64}$″ diameter
Size of sheet required, 24″×120′, No. 20 gage
Number of blanks from each sheet, 6
Number of sheets required, 500 ÷ 6 = 84
Total area of each sheet = 20 sq. ft.
Total area of 84 sheets (84×20) = 1680
Weight of No. 20 galv. steel per sq. ft. = 1.656 lb.
Total weight of metal required (1680×1.656) = 2782 lb.
Cost of 500 bottoms at 8.5¢ per lb. = $236.47

Item 3. Cost of 4000 Single Rib Slats.

Size of blank, 24″×$2\frac{1}{8}$″, No. 24 gage
Size of sheet required, 24″×120″
Number of blanks from each sheet, 41
Number of sheets required, 4000 ÷ 41 = 98 sheets
Weight per sheet, 23.12 lb.
Weight of 98 sheets, 98×23.12 = 2265.76 lb.
Cost of 4000 metal slats at 8.5¢ per lb. = $192.59

Item 4. Cost of Hoops.

Length of upper hoop = 56.07″
Length of lower hoop = 55.95″
Combined length of upper and lower hoops = 112.02″
Total length of 500 upper and 500 lower hoops,

$$\frac{(500\times112'')}{12} = 4666 \text{ ft.}$$

Weight of 4666 ft. at 1.195 lb. per ft. = 5575.87 lb.
Plus 5 per cent for waste = 5854.66 lb.
Total cost of hoops at $11\frac{1}{2}$¢ per lb. = $658.65

Digitized by Google

Item 5. Cost of Rivets.

Total number of 2½ lb. rivets required (500×52) = 26,000
Total number of 6 lb. rivets required (500× 4) = 2,000
Total number of 8 lb. rivets required (500× 4) = 2,000
Total number of 1½ lb. rivets required (500×16) = 8,000

Flat Head Tinner's Rivets are sized by their weight per thousand; i.e 1000 rivets of 2½ lb. weigh 2½ lb.

Weight of 26000-2½ lb. rivets (26×2½) = 65 lb.
Weight of 2000-6 lb. rivets (2×6) = 12 lb.
Weight of 2000-8 lb. rivets (2×8) = 16 lb.
Weight of 8000-1½ lb. rivets (8×1½) = 12 lb.

Total weight of all rivets = 105 lb.
Total cost of rivets at 40¢, average price per lb. = $42

Item 6. Drop Handles.

Total number of handles required, 500×2 = 1000
Weight of 36 handles and lugs, 15.66 lb.
Weight of 1000 handles (1000÷36)×15.66 = 444.18 lb.
Cost of 1000 handles at 30¢ per pound = $133.25

Summary of Costs.

Item 1	$491.30
Item 2	236.47
Item 3	192.59
Item 4	658.65
Item 5	42.00
Item 6	133.25
Total cost	$1754.26
Cost per barrel	$3.51

Digitized by Google

CHAPTER VIII

SECTIONS FORMED BY CUTTING PLANES

Prob. No.	JOB	DRAWING OBJECTIVE	MATHEMATICAL OBJECTIVE
29	SPRINKLING CAN	Extension of idea of cylinders and cones cut by inclined planes.	Lateral area of cylinders and cones. Volume of cylinder.
30	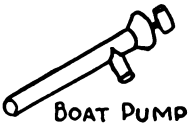 BOAT PUMP	Standard construction.	Wt. of rods per foot. Computing cost of pump.
31	ROOF FLANGES 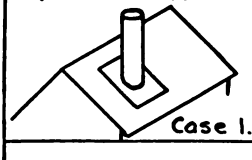 Case 1.	Cylinder cut by one plane.	None.
	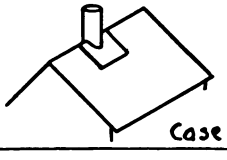 Case 2	Cylinder cut by two planes.	
	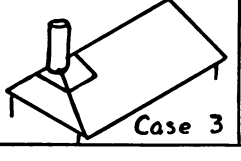 Case 3	Cylinder cut by three planes.	

Objectives of Problems on Sections Formed by Cutting Planes.

Digitized by Google

Problem 29

SPRINKLING CAN

55. The Sprinkling Can.—Figure 164 represents a section of a sprinkling can with the names of the various parts. Special attention should be given to the methods of assembly.

An elevation, Fig. 165, should be drawn according to the dimensions given in Fig. 164.

The Spout.—The sides of the spout, Fig. 165, should be carried upwards until they meet at the apex. The top side of the spout, Fig. 165, is extended into the elevation so that the distance from the apex to point 1 will be equal to the distance from the apex to point 5. The straight line 1–5 is drawn to serve as the base of the cone. A half-profile of the cone (spout) is drawn and divided into four equal spaces. Extension lines are carried from each division, meeting the base line at right angles. From the intersections of the base lines, extension lines are carried to the apex of the cone. The profile of the body of the sprinkling can, Fig. 166, is drawn next. The horizontal center line is extended to the right of the profile indefinitely. An extension line is dropped from the apex of Fig. 165 until it intersects the horizontal center line of Fig. 166. This will locate the apex of Fig. 166. Extension lines are dropped from the base of the cone (spout) in Fig. 165 until they intersect the horizontal center line of Fig. 166. These intersections should be numbered 1, 2, 3, 4, and 5 to correspond to the half-profile. The distances *a*, *b*, and *c* taken from corresponding lines in the half-profile of Fig. 165 are set off upon these extension lines. Lines are drawn from each of these points to the apex of Fig. 166. These lines intersect the profile of the body at three different points *D*, *E*, and *F*. Extension lines should be carried upward until *D* intersects the line from 2, *F* intersects the line from 3, and *E* intersects the line from 4. A curved line passing through these points will give the developed miter line between the body and the spout.

With a radius equal to the distance from the apex to point 5, Fig. 165, and with the apex as a center, the arc of stretchout, Fig. 167, is drawn. Twice as many spaces as there are in the half-profile of the spout are set off upon this arc. Lines from each of these points should be drawn to the apex. Straight lines are drawn

Digitized by Google

parallel to the base line 1–5 across the elevation of the cone, Fig. 165, from each intersection of the developed miter line. These lines intersect the side or slant height of the cone at five different points. With the apex as a center, arcs are carried from each of these points over into the stretchout. Starting with point 1 of

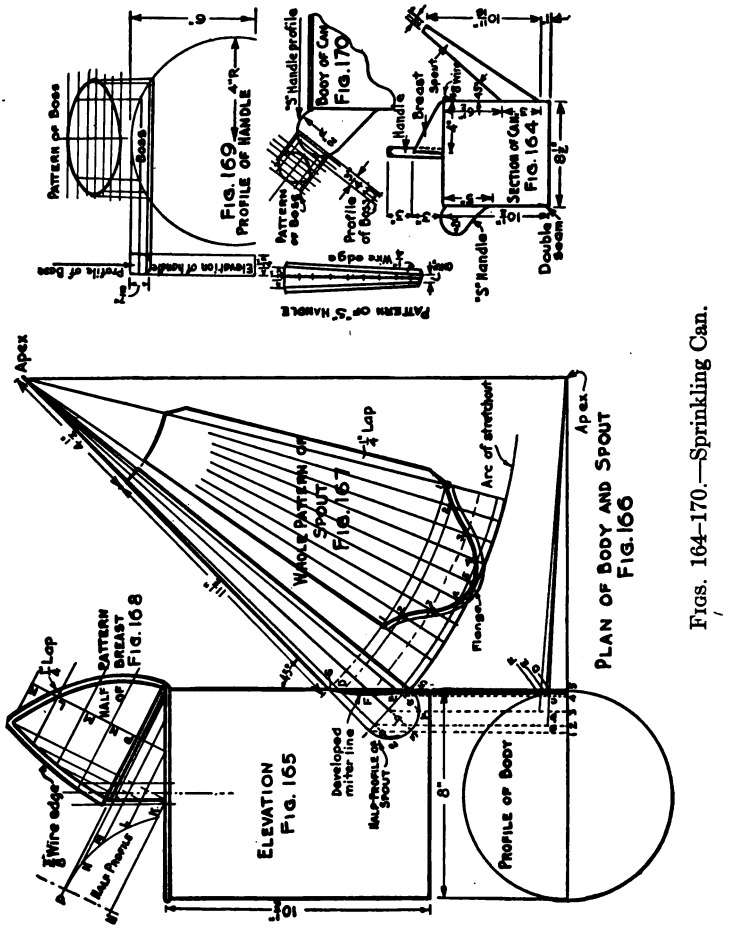

Figs. 164–170.—Sprinkling Can.

the half-profile, the extension line is traced to the base of the cone, thence to the developed miter line, and from this point to the correspondingly numbered lines of the stretchout. In like manner the remaining intersections may be traced. A curved line passing through these points will give the miter cut of the pattern. An

Digitized by Google

arc drawn from the apex as a center, with a radius equal to the distance from the apex to the top of the spout, will complete the pattern. A $\frac{3}{16}$-inch flange is added outside of the miter cut, as shown in Fig. 167, and a $\frac{1}{4}$-inch lap parallel to one side of the spout is also added.

Pattern of Body.—The pattern for the body is a rectangular piece of metal the length of which is equal to Diameter $\times \pi + \frac{1}{2}$ in., and the width of which is equal to the height of the can plus $\frac{3}{8}$ in. for the wire edge, plus $\frac{1}{8}$ in. for the single edge at the bottom of the can. This feature of the problem is so familiar to the student that it is omitted from the drawing. Manufacturers generally punch a round hole at the point where the center line of the spout intersects the side of the can. The hole may, however, be developed according to the principles laid down in Chapter V.

The Breast.—The breast is a portion of a cylindrical surface cut by two inclined planes. The top line of the breast in Fig. 165 is extended indefinitely to the left. At right angles to this line another line is drawn to serve as a center line for the half-profile. The line H–K is drawn at right angles to the center line. This line, if prolonged, should pass through the intersection of the breast and the top of the can. A distance equal to one-half the diameter of the can is set off upon H–K. The connecting points P and K of the half-profile should be drawn. The center from which this arc is drawn should fall on the center line of the half-profile. The arc is divided into four equal spaces. Extension lines are carried with the elevation of the breast as shown. A line of stretchout is drawn and the spacing of the half-profile with letters to correspond is transferred to it. From each intersection of the miter lines, extension lines are carried over into the stretchout. Starting from the half-profile, each extension line can be traced first to the miter lines and thence to a correspondingly lettered line in the stretchout. Curved lines passing through these points will give the half pattern of the breast, Fig. 168. A $\frac{1}{4}$-inch lap is added to the side that adjoins the body, and a $\frac{3}{8}$-inch wire edge to the other side of the breast.

The Handle.—The handle or bail of the can is a straight piece of metal $1\frac{1}{4}$ in. wide that is formed to the profile shown in Fig. 169. The handle extends down below the top of the can and is riveted and soldered to the body. A double hem or a wire may be used to stiffen each edge of the handle. A boss is soldered into the upper

Digitized by Google

part of the handle to aid the hand in gripping it. The handle does not require a pattern since it is a straight strip of metal whose length is equal to the perimeter of the profile, Fig. 169, and whose width is equal to $1\frac{1}{4}$ in. plus the allowances for stiffening each side. The pattern of the boss is obtained in exactly the same manner as the pattern of the breast, and needs no further description. Figure 170 shows the profile of the *S* handle together with its boss. The pattern for the *S* handle is a tapering strip of metal whose length is equal to the distance around the profile, Fig. 170, and whose large end is $1\frac{1}{4}$ in. wide, while the small end is $\frac{5}{8}$ in. wide. A $\frac{1}{4}$-inch wire edge is added to each side for the stiffening wire.

56. Related Mathematics on Sprinkling Can.—*Volume of Sprinkling Can.*—In Chapter II it was learned that the volume of a cylinder is equal to the area of the base multiplied by the height, or $V = A \times H$. It was also found that the area of a circle was equal to the diameter squared, multiplied by .7854, or $D^2 \times .7854$.

Sprinkling cans are generally listed according to their holding capacity in gallons, quarts, and pints.

Sample Problem.—What is the capacity of a sprinkling can whose diameter is 8″ and whose height is $10\frac{1}{2}$″?

Formula: $V = D^2 \times .7854 \times H$

Substituting, $V = 8^2 \times .7854 \times 10.5.$

$V = 64 \times .7854 \times 10.5.$

.7854
64
31416
47124
50.2656
10.5
2513280
5026560
527.78880 cu. in.

There are 231 cu. in. in one gallon; therefore,

231 | 527.789 | 2.28 gallons
462
657
462
1958
1848
1109

Ans. 2.28 gal. or 9 qt.

But, 2.28 gallons is approximately 9 quarts, the extra contents being allowed for carrying nine full quarts without danger of spilling.

Digitized by Google

Problem 29A.—What is the capacity, in quarts, of the following standard sizes of sprinkling cans:

	Diameter of Bottom.	Height of Body.
(*a*)	4″	$4\frac{5}{8}$″
(*b*)	$5\frac{5}{8}$″	$7\frac{3}{16}$′
(*c*)	$7\frac{1}{8}$″	9″
(*d*)	$8\frac{13}{16}$″	$11\frac{5}{16}$″

Problem 29B.—Regarding the body blank for the can as a rectangle whose height is equal to $10\frac{1}{2}''+\frac{3}{8}''+\frac{3}{16}''$ and whose length is $(8\times 3.1416)+\frac{1}{2}''$ what is its area in square inches?

Problem 29C.—Regarding the bottom of the can as a circle whose diameter is equal to $8''+\frac{3}{8}''+\frac{3}{8}''$, what is its area in square inches?

Problem 29D.—Regarding the whole pattern of the breast, Fig. 168, as the combined area of two right triangles, having bases $5\frac{1}{2}''$ long and altitudes 8″ high, what is the total area of the breast?

Problem 29E.—Regarding the spout as a trapezoid whose upper base is $1\frac{3}{4}''$, whose lower base is 9″, and whose altitude is $13\frac{1}{2}''$, what is its area in square inches?

Problem 29F.—Regarding the semicircular handle as a rectangular piece of metal whose length is $\frac{8\times\pi}{2}+4''$, and whose width is $1\frac{1}{4}''+\frac{1}{4}''+\frac{1}{4}''$, what is its total area?

Problem 29G.—Regarding the "boss" in Fig. 169 as a rectangle whose length is $4\frac{7}{8}''$, and whose width is 2″, what is its total area?

Problem 29H.—Regarding the S handle as a trapezoid whose upper base is $\frac{5}{8}''$, whose lower base is $1\frac{1}{4}''$, and whose altitude is $5\frac{1}{4}''$, what is its total area?

Problem 29I.—Regarding the "boss" in Fig. 170 as a rectangle whose width is $1\frac{1}{16}''$ and whose length is $2\frac{1}{8}''$, what is its area?

Problem 29J.—Adding together the answers to problems, *29B, C, D, E, F, G, H,* and *I,* what is the combined area of all the parts?

Problem 29K.—A sheet of IXXXX charcoal tin measuring $20''\times 28''$, costs 50 cents. Adding 5 per cent to the answer of Problem 29J, how much will the stock required for one sprinkling can cost?

Digitized by Google

Problem 30

BOAT PUMP

57. The Boat Pump.—A boat pump consists of a straight piece of pipe called the barrel, to which is attached a frustum of a cone (the funnel). A tapering spout is riveted and soldered over an opening in the pump barrel. Into the lower end of the pump barrel a "lower box" is soldered. The "lower and upper boxes" may be obtained from almost any supply house. The upper box is threaded to receive the pump rod. The pump rod has an oval handle formed upon its upper end. Measurements are usually given from the under side of the spout to the lower end of the pump, for the diameter of the barrel, and for the length of the spout. The other details of construction are left to the discretion of the designer.

The Barrel.—The barrel of the pump is made from one piece of metal, if possible, in order to avoid any possibility of the upper box catching as it works up and down in the cylinder. The pattern is a rectangular piece of metal the length of which is shown in the elevation, Fig. 171, and the width of which is equal to (Diameter$\times\pi$)$+\frac{1}{2}$ in. for locks.

The Spout.—An elevation should be drawn according to the dimensions given in Fig. 171. The center line of the spout is next drawn and prolonged to the right indefinitely. The sides of the spout are extended until they meet the center line at the apex. They are also extended to the left until they meet the center line of the barrel. This will give a right cone whose base is the line 1–5. A half-profile for this cone should be drawn. It should be divided into four equal parts, and each division numbered. A profile of the barrel, Fig. 172, should next be drawn. Using the same center, a half-profile of the spout, Fig. 172, should be put in. A horizontal center line that is long enough to receive an extension line dropped from the apex of Fig. 171 should also be drawn. This half-profile is divided into four equal parts and these divisions numbered to correspond to those of the half-profile in Fig. 171. These numbers change their positions as can be seen. From each division in both half-profiles, lines are drawn to the bases of the cones forming angles of 90°. From each intersection thus found, lines are drawn to the apex. In Fig. 172, the line 1 intersects the

Digitized by Google

profile of the barrel at point *a*, line 2 at point *b*, and line 3 at point *c*. Extension lines are carried up into Fig. 171 from points *a*, *b*, and *c* of Fig. 172. At the points where these lines intersect

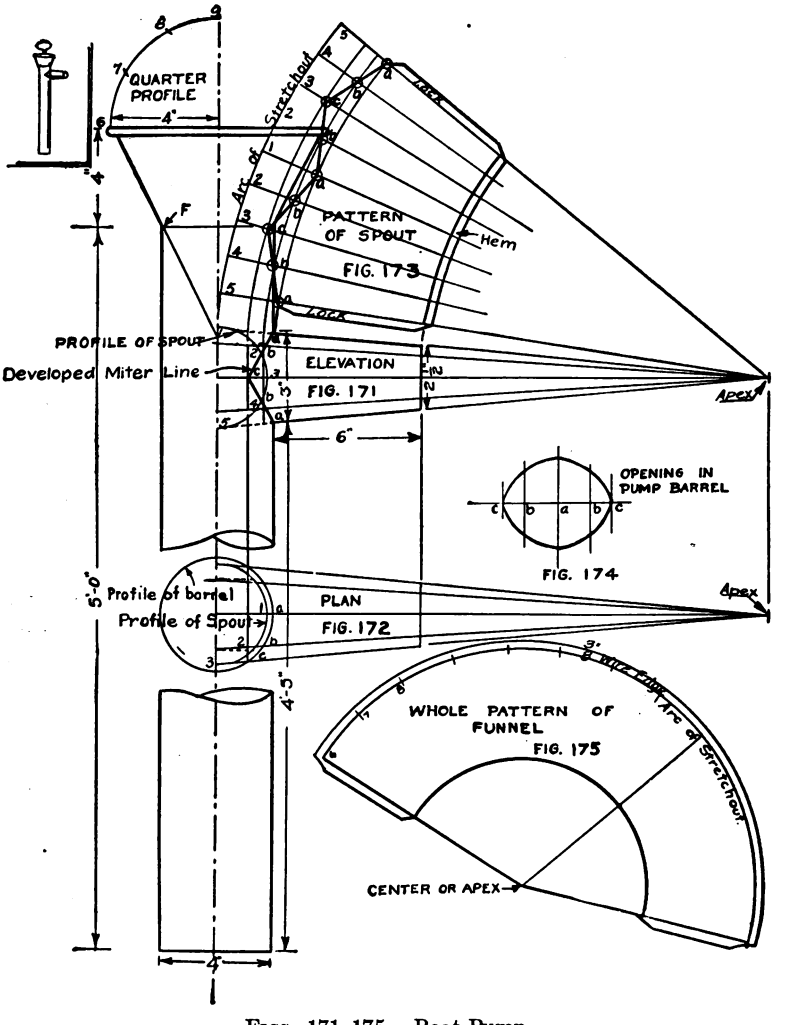

FIGS. 171–175.—Boat Pump.

corresponding lines in Fig. 171, will be the location of the new points *a*, *b*, and *c* of Fig. 171. A curved line traced through these points will give the developed miter line.

Digitized by Google

Pattern of Spout.—The arc of stretchout, Fig. 173, is drawn with a radius equal to the slant height of the cone, and with the apex as a center. The spacing of the half-profile is transferred to this arc with numbers to correspond. Where extension lines from points *a*, *b*, and *c* cut the slant height of the elevation, extension arcs are drawn over into the stretchout. All intersections should be traced out by starting from the profile, following each extension line to the miter line, and thence to a correspondingly numbered line in the stretchout. The miter cut of the pattern is obtained by tracing a curved line through these intersections. An arc whose radius is equal to the distance from the apex to the end of the spout completes the pattern. A lock on each side of the spout and a hem on the small end of the spout are added. A flange (not shown) should be added to the miter cut.

The Opening.—Upon any straight line, the distances *a* to *b* and *b* to *c* of Fig. 172 are set off. Since this is but half of the opening, this operation must be repeated as shown in Fig. 174. Measuring lines are drawn through each of these points. Upon the lines *b* the distance from point 2 to the center line of the half-profile of Fig. 172 is set off. Upon the lines *a*, the distance from point 1 to the center line of the half-profile of Fig. 172 is set off. Points *c* fall upon the center line of Fig. 174. A curve traced through the points thus obtained will give the shape of the opening.

The Funnel.—One side of the funnel should be extended inward until it meets the center line of the barrel. This will locate the apex of the whole cone, of which the frustum is a part. With any convenient point as a center, and a radius equal to the distance from this apex to the large end of the funnel, an arc of stretchout, Fig. 175, is drawn. A quarter-profile is placed above the elevation of the funnel in Fig. 171. This is divided into three equal parts. Since this is but a quarter-profile, twelve spaces must be transferred to the arc of stretchout in Fig. 175. The first and last points are connected to the apex by means of straight lines. The pattern is completed by an arc, drawn from the center of Fig. 175, whose radius is equal to the distance from the apex of the funnel to the point *F* in Fig. 171. The necessary locks and wire edge should be added.

58. Related Mathematics on Boat Pump.—*Problem 30A.*—The barrel of the boat pump is a cylinder whose diameter is 4″ and

Digitized by Google

whose height is 5′−0″. Allowing $\frac{3}{4}$″ for locks what is the area of its pattern?

Problem 30B.—The funnel of the pump is a frustum of a cone whose lower base diameter is 8″, upper base diameter 4″, and altitude 4″. What is its area?

Sample Problem.—Substituting for the above dimensions 6″ upper base, 3″ lower base, and 3″ altitude, we would have

Original Formula:

$$\frac{\text{Circumference of upper base}+\text{Circumference of lower base}}{2}\times\text{slant height.}$$

Substituting,

$$\frac{(6\times\pi)+(3\times\pi)}{2}\times\sqrt{3^2+1.5^2}$$

The slant height of any frustum of a right cone is equal to the hypotenuse of a right triangle whose base is the difference between the radius of the upper base and the radius of the lower base, and whose altitude is the altitude of the frustum. The slant height of this frustum is, therefore, equal to the hypotenuse of a right triangle whose base is $3''-1\frac{1}{2}''=1\frac{1}{2}''$, and whose altitude is 3″. But the hypotenuse is equal to $\sqrt{\text{base}^2+\text{altitude}^2}$; therefore, the slant height for this frustum is $\sqrt{3^2+1.5^2}$

Solving further,

$$\frac{18.85+9.42}{2}\times\sqrt{9+2.25}=$$

$$14.13\times3.35=47.33 \text{ sq. in.}$$

Problem 30C.—The spout, Fig. 171, is also a frustum of a cone whose lower base has a diameter of $3\frac{1}{8}$″, and upper base a diameter of $2\frac{1}{2}$″. The *slant height* may be called $7\frac{1}{2}$″. What is its area?

Problem 30D.—What is the combined area of Problems 30A, 30B, and 30C?

Problem 30E.—Allowing 10 per cent for waste, what will be the cost of the material for one pump at 8 cents per square foot?

Digitized by Google

Problem 31

ROOF FLANGE

59. The Roof Flange.—Case I. *The Roof Having One Inclination.*—The measurements usually given for a roof flange are the diameter of the pipe, and the pitch of the roof. The roof pitch is generally given as "so many inches to the foot." Figure 176 shows the rise and run of the roof line. If the job called for a roof pitch of 4 in. to 1 ft., the line marked *run*, Fig. 176, would measure 12 in. and the line marked *rise* would measure 4 in.

Pattern of Pipe.—An elevation is first drawn according to the dimensions given in Fig. 176. A profile is drawn above this view and is divided into equal spaces. Each division is numbered. Extension lines from each division of the profile are carried down to the roof line. A line of stretchout is drawn, and the spacing from the profile transferred to this line. The spaces are numbered to correspond. The measuring lines of the stretchout are drawn in. From each intersection of the miter (roof) line of Fig. 176, extension lines are carried over into the stretchout. Starting from point 1 of the profile, the extension lines should be traced downward to the miter line, and thence to a correspondingly numbered line in the stretchout, Fig. 177. In like manner all points of intersection can be located in the stretchout. A curved line passing through these points will give the miter cut of the pattern. An extension line drawn from the top of the roof flange elevation completes the pattern. A $\frac{1}{2}$-inch lock is added to each side of the pattern and a $\frac{3}{8}$-inch double edge to the miter cut in order to join the pipe to the apron by double seaming.

Opening in Apron.—Any straight line is drawn to serve as a line of stretchout, Fig. 178. The exact spacing between the intersections of the miter line is transferred to this line, and these spacings numbered to correspond. A measuring line is drawn through each point as shown in Fig. 178. Upon line 2 of Fig. 178, a distance equal to line *a* of Fig. 176 is set off. Similarly, line 3 would receive the length of line *b* from Fig. 176, line 4 would receive *c*, line 5 would receive *d*, and line 6 would receive *e*. These distances may now be transferred to the opposite side of the line of stretchout, since both parts of the opening are exactly equal. A curved line drawn through the points thus located will give the

Digitized by Google

shape of the opening. The apron of the flange may now be drawn around the opening, allowing at least 3 in. on the sides and bottom

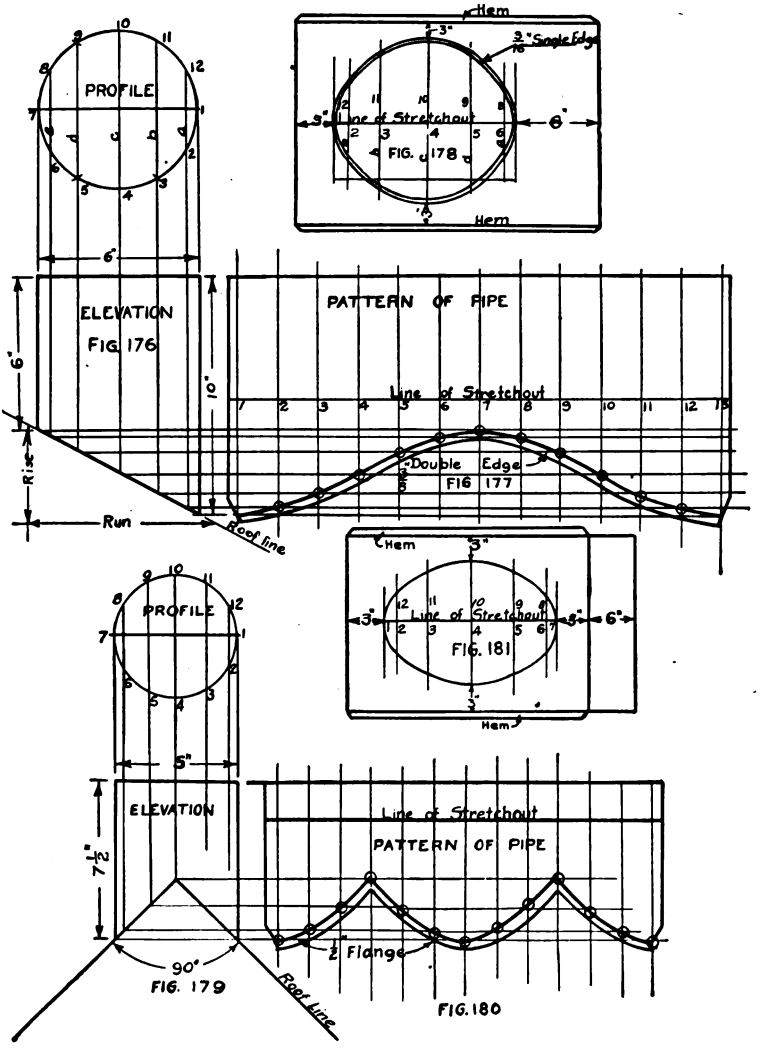

FIGS. 176–181.—Roof Flanges.

and 6 in. on the top. A hem should be added to the long sides of the apron to direct the flow of water.

Digitized by Google

Case II. *The Flange Fitting over the Ridge of a Roof.*—Figure 179 shows an elevation and profile of a roof flange fitting over the ridge of a 90° or "square-pitch" roof. Figure 180 shows the pattern for the pipe. It will be noticed that this type of flange cannot be easily double seamed; therefore, a ½-inch edge is added to the miter cut. This edge is turned off, and riveted and soldered to the apron. Figure 181 shows the pattern of the apron. A bend of 90° must be made on line 4 in order to fit the apron over the ridge of the roof. The description for Case I will apply to this problem, the only difference being the shape of the miter cut in Fig. 176.

Case III. *The Flange Fitting over the Ridge and Hips of a Roof.*—An elevation is first drawn according to the dimensions given in Fig. 182. Above this elevation a half-profile is drawn and divided into equal spaces and numbered as shown. Extension lines are carried from each division down to the roof line. A plan, Fig. 183, is drawn in the following manner: Extend the center line of the elevation downward indefinitely. Construct a rectangle, Fig. 183, using this line as a center line. This rectangle will represent the top view or plan of the apron of the finished flange. Draw two lines at an angle of 45° to represent the hips of the roof. The center line becomes the ridge. With the point where the ridge and hips meet, as a center, and a radius equal to that of the half-profile, Fig. 182, draw a circle. Divide this circle into twice as many equal parts as there are in the half-profile. Number these divisions to correspond. The hips cross this circle halfway between points 2 and 3 and 5 and 6. Number these points 2½ and 5½ respectively. Carry extension lines upward from each division of the circle, to the roof line.

That part of the miter line not already shown in elevation can be developed. Points 2½ and 5½ in Fig. 182 occur where the lines from these points in Fig. 183 intersect the roof line in Fig. 182. Since this is the highest point of the miter line on the hips, point 3 must be opposite point 2, point 4 opposite point 1, and point 5 opposite point 6. This is indicated by horizontal dotted lines in Fig. 182. A curved line drawn through these points will be the developed miter line. A line of stretchout, Fig. 184, is now drawn. The exact spacing is transferred from the circle in Fig. 183 to this line, and numbered to correspond.

The measuring lines of the stretchout are drawn. Starting at

Digitized by Google

point 1 of the plan, the extension line is traced to the miter line, and thence to a correspondingly numbered line in the stretchout. In like manner, all points of intersection can be located in the stretchout. A curved line passing through these points will give the miter cut. The pattern is completed by an extension line drawn from the

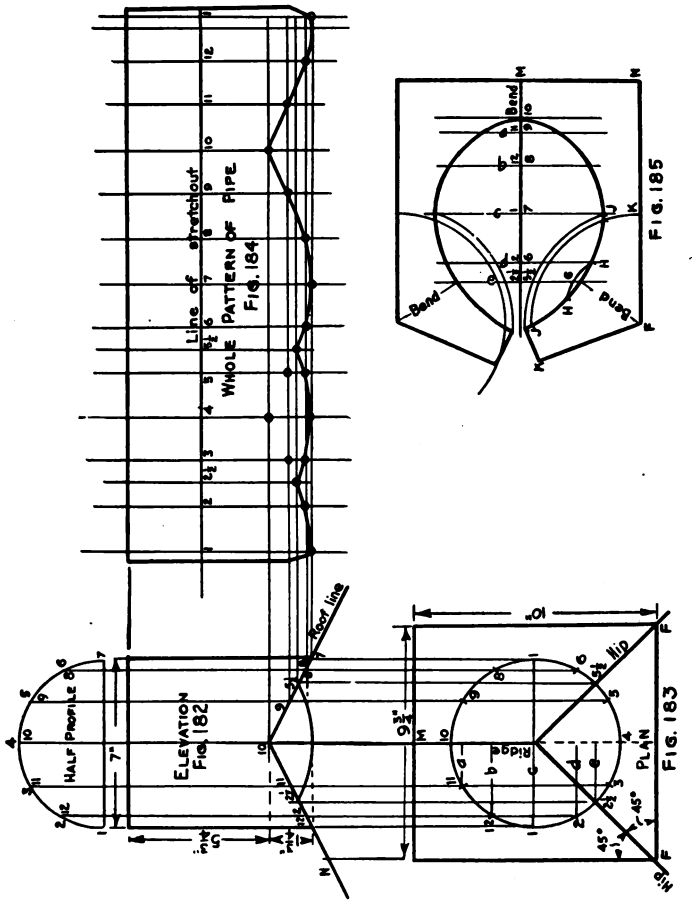

Figs. 182–185.—Roof Flange to Fit Over Ridge and Hips of Roof.

top of the pipe. A lock is added to each side of the pattern. A flange (not shown) should be added to the miter cut.

The Apron.—The exact spacing of points 10, 11, 12, 1, 2, and $2\frac{1}{2}$, as shown on the center line of Fig. 183 by lines *a*, *b*, *c*, *d*, and *e*, are set off upon any straight line, Fig. 185. These points also

Digitized by Google

bear the numbers 9, 8, 7, 6, and 5½ as shown in Fig. 185. Measuring lines are drawn through each of these points. The distances *a*, *b*, *c*, etc., are taken from lines, *a*, *b*, *c*, *d*, and *e* of Fig. 183 and are set off on the measuring line. A curved line passing through these points will give the shape of the opening for the main part of the flange that is to fit over the ridge. The distance 10–*M*, Fig. 185, is made equal to 10–*M* of Fig. 183. A perpendicular is drawn at point *M*. The distance *MN* is made equal to 10–*N* of Fig. 182. Another perpendicular line is erected at point *N*. Distance *NF* is made equal to *NF* of Fig. 183. The bending line *FG* is drawn in. With *F* as a center, arcs are drawn from points *H*, *J*, and *K* to the left an indefinite distance. With *G* as a center, the distance *GH* is set off on the other side of point *G*. Similarly, the distances *GJ* and *GK* are set off on the other side of point *G*. The straight lines *KF* and *KJ* will complete the pattern of one side of the flange, with the exception of the curve *JHG*. The other half of the pattern is exactly equal to the one already drawn and is produced by the same method.

Digitized by Google

Digitized by Google

CHAPTER IX

FRUSTUMS OF RECTANGULAR PYRAMIDS

Prob. No.	JOB	DRAWING OBJECTIVE	MATHEMATICAL OBJECTIVE
32	DRIPPING PANS	Idea of the pan corner Standard rule for size of pans.	Subtraction of fractions.
33	RANGE PANS— UNEQUAL FLARE	Views necessary to give complete information.	Area of a trapezoid.
34	REGISTER BOX 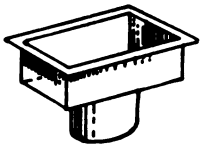	Standard construction.	Free area of register and equivalent pipe sizes.

Objectives of Problems on Frustums of Rectangular Pyramids.

Digitized by Google

Problem 32

DRIPPING OR ROASTING PAN

60. Dripping or Roasting Pan.—Figure 186 is a sectional view of a standard dripping or roasting pan. Since pans of this kind are subjected to temperatures above that at which solder melts, it is necessary to employ some means besides soldering to enable them to hold liquids. This is accomplished by folding the corners of the pattern so that they will lie flat against the ends.

Standards of Construction.—All dripping pans have a standard flare of three-eighths of an inch as shown in Fig. 186. They are wired with No. 8 tinned or coppered wire. The measurements for this type of pan are always understood to be measurements of the top of the pan outside of the wire. The dimensions of the bottom are always $1\frac{1}{4}$ in. less than the measurements of the top. Thus, a 12 in. $\times$ 18 in. dripping pan measures 12 in. $\times$ 18 in. outside the wire around the top, and the bottom measures $10\frac{3}{4}$ in. $\times 16\frac{3}{4}$ in. The depth varies with the size of the pans.

Pattern of One Corner.—Figure 187 shows a full size development of one corner of a dripping pan, which is produced in the following manner:

Draw the lines *ab* and *bc* forming an angle of 90°, Fig. 187.

Continue these lines indefinitely (shown by dotted lines *bd* and *be*), and set off upon these lines the slant height of the pan, *bd* of Fig. 187.

Draw lines *dH* and *ek* parallel to lines *ba* and *bc*, respectively.

Make lines *df* and *eg* three-eighths of an inch long.

Prolong these lines until they meet at the point *L*.

Draw the diagonal *Lb*.

With point *f* as a center, and any radius, draw the arc *mnp*.

With *n* as a center, set off the distance *mn* on the other side of the point *n* so that arc *np* will exactly equal arc *nm*.

Draw the line *fg*, extending it until it intersects the diagonal at the point *r*.

Draw the line *rg*.

Draw the lines *s–T* and *t–u* parallel to *f–r* and *r–g*, and at a distance of $\frac{1}{8}$ in.

This cutting away of the corner allows the wire around the top

Digitized by Google

of the pan to lie flat against the ends and prevents thereby a "bunch" at each corner.

A wire edge of $\frac{3}{8}$ in. should be added to each top edge as shown in Fig. 186.

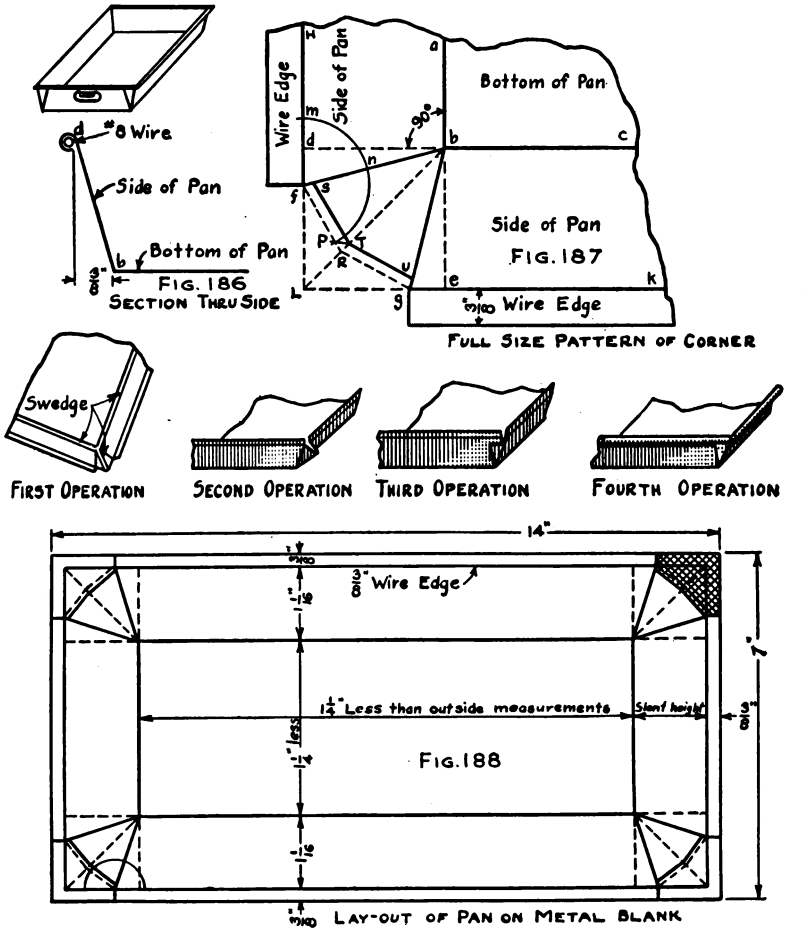

FIGS. 186–188.—Dripping or Roasting Pan.

First Operation.—The outline of the bottom of the pan is swaged on all sides by means of the "Square Pan Swage." The diagonals (line *b. T.* of Fig. 187) are next swaged in the same machine.

Second Operation.—The sides are "brought up" simultaneously

Digitized by Google

over the hatchet stake, the corners taking the shape shown in the illustration. These corners are then closed down on the "square head."

Third Operation.—Each corner in turn is then placed in position on the "crooked square head" and the corner "brought around" as shown in the illustration.

Fourth Operation.—The wire edge is then "laid off" over the edge of the bench, the wire inserted, and finished in the wiring machine. The bottom edges are then straightened and the oval handles attached to the ends of the pan.

Laying out Directly upon the Metal.—Figure 188 shows the pattern of a dripping pan measuring $12\frac{3}{8}$ in. $\times 5\frac{3}{8}$ in. $\times 1$ in. deep. The first step is to compute the size of the blank required. Since the bottom is $1\frac{1}{4}$ in. smaller than the top, the bottom measurements would be

$$12\tfrac{3}{8}'' - 1\tfrac{1}{4}'' = 11\tfrac{1}{8}'' \text{ (length)}$$

$$5\tfrac{3}{8}'' - 1\tfrac{1}{4}'' = 4\tfrac{1}{8}'' \text{ (width)}$$

To each dimension of the bottom must be added two slant heights and two wire edges. The slant height of a pan 1 in. deep and $\frac{3}{8}$ in. flare is $1\frac{1}{16}$ in.; therefore, the dimensions of the blank would be

$$11\tfrac{1}{8}'' + (1\tfrac{1}{16} \times 2) + (\tfrac{3}{8} \times 2) = 14'' \text{ (length)}$$

$$4\tfrac{1}{8}'' + (1\tfrac{1}{16} \times 2) + (\tfrac{3}{8} \times 2) = 7'' \text{ (width)}$$

The workman cuts a rectangular piece of metal 7 in. $\times$ 14 in. and lays off a $\frac{3}{8}$-inch wire edge, Fig. 188. Inside of these lines he lays off a distance of $1\frac{1}{16}$ in. to form the outline of the bottom. He then develops the pattern of one corner, according to the description given for Fig. 187. Having obtained the pattern for one corner, he transfers the measurements to the other three corners and the pattern is complete. The shaded portion of Fig. 188 denotes that part of the blank which is cut away.

61. Related Mathematics on Dripping Pans.—Dripping pans are made in a great variety of sizes, the more common of which are: $10'' \times 15'' \times 2\frac{1}{4}''$; $12'' \times 17'' \times 2\frac{1}{4}''$; $12'' \times 19'' \times 2\frac{1}{2}''$; $14'' \times 15'' \times 2\frac{1}{2}''$; and $18'' \times 19'' \times 2\frac{1}{2}''$.

Problem 32A.—What will be the dimensions of the blanks required for each of the above sizes of pans?

Digitized by Google

Problem 32B.—What will be the weight of each of the above sizes of pans if made from No. 28 U. S. S. Gage black iron (.6375 lb. per sq. ft.) and "wired" with No. 8 gage wire weighing .07 lb. per running foot? (Do not deduct for the corners that are cut away.)

Problem 32C.—Using stock size sheets of 30″×96″ black iron, what would be the percentage of waste per pan for dripping pans measuring 12″×17″ and 2¼″ deep?

Digitized by Google

Problem 33

RECTANGULAR FLARING PANS

62. Rectangular Flaring Pans.—Frequently, the contour of the ash pit demands that a furnace or range ash pan be given unequal flares. Such a pan is shown in Figs. 189 and 190. It should be noted that the sides of the pan flare 2 in. as shown in Fig. 189, while the front end flares 5 in., and the back end flares 3 in. as shown in Fig. 190.

The Elevation.—A front and side elevation should be drawn, setting forth the exact dimensions of the pan. The pan is stiffened around the upper edge with a $\frac{1}{4}$-inch rod. When this rod is covered with the wire edge, not less than $\frac{3}{8}$ in. should be allowed for clearance. Thus a pan measuring $34\frac{3}{4}$ in. $\times 16\frac{3}{4}$ in. outside of the wire would measure 34 in. $\times$16 in. inside of the wire. The pan has two profiles *A*, *B*, *C*, *D* of Fig. 190, and *E*, *F*, *G*, *H* of Fig. 189.

The Pattern.—Two lines of stretchout are drawn at right angles to each other as shown by the dotted lines of Fig. 191. The spacings of the profiles are set off upon these lines of stretchout, the spacings *A*, *B*, *C*, and *D* being taken from Fig. 190, and the spacings *E*, *F*, *G*, and *H* being taken from Fig. 189. Measuring lines are drawn at right angles to the line of stretchout through each of these points. The flares 5 in., 3 in., and 2 in. should now be set off at their respective corners as shown in Fig. 191. The inclined lines representing the meeting lines of each corner should be put in.

A $\frac{3}{4}$-inch lap is added to each corner of the sides of the pan, and a center line for the rivet holes drawn in. The centers for the rivet holes should also be located in the laps. With the corner of the bottom (point *P*) as a center, arcs intersecting a straight line drawn $\frac{3}{8}$ in. in from the meeting line of the end should be drawn. Only one corner of Fig. 191 is treated for rivet holes, but it is required that the rivet holes for all corners be located. The $\frac{5}{8}$-inch edge for covering the $\frac{1}{4}$-inch rod may now be added to complete the pattern.

The Bail.—The bail is shown in Figs. 189 and 190 by dotted lines. Since the bail is below the top line of the pan, it must be drawn carefully in order to scale the dimensions accurately. It is generally placed so that the bail ear will be to the rear of the center. The ear is attached in such a manner that the "stop" will

Digitized by Google

maintain the bail in an upright position. The center of gravity being in front of the bail allows the pan to be carried with one hand without danger of spilling the contents.

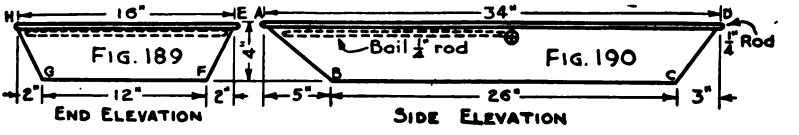

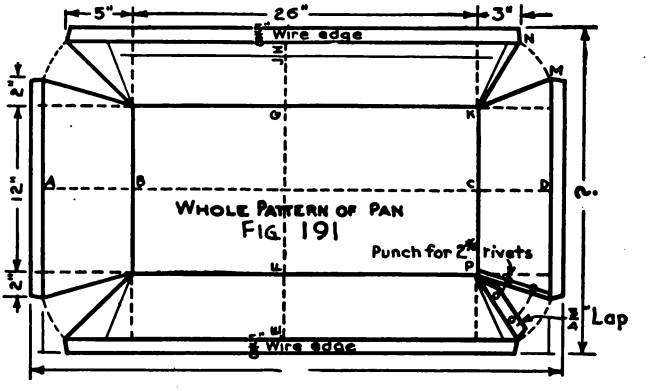

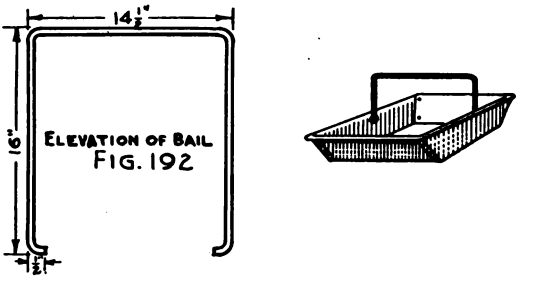

FIGS. 189–192.—Rectangular Flaring Pan.

Figure 192 shows an elevation of the bail. The dimensions are all given for the center lines of the rod. In case the rod is bent to a "close angle" in the vise, these dimensions will answer. However, if a long radius bend is desired, the actual length of the center

Digitized by Google

line must be computed, in order to obtain the length of the blank piece of rod required to make the bail.

63. Related Mathematics on Rectangular Flaring Pans.—*Problem 33A.*—How much will the flaring pan of Fig. 191 weigh if made from No. 20 U. S. S. Gage black iron (1.53 lb. per sq. ft.)? The pattern is to be regarded as a rectangle.

Problem 33B.—How much will the rod around the top edge of the pan, Figs. 189 and 190, and the rod required to make the bail, Fig. 192, weigh if $\frac{1}{4}''$ rods weigh 0.1669 lb. per ft.

Problem 33C.—How much will the material required to make the complete pan cost at 7 cents per pound?

Digitized by Google

Problem 34

REGISTER BOXES

64. Register Boxes.—Register boxes are generally made from 1 *C* coke tin, commonly called by the trade "furnace pipe tin." The tin box must be made to fit the body size of the register. An allowance is generally made to assure an easy "fit" between the body of the register and the box. This allowance varies with the sizes of the registers as follows:

Size of Register Body.	Dimension of Box.	Depth of Box.
Not wider than 4 in., any length	Add $\frac{1}{4}$ in. to each dimension of body	4 in.
Not wider than 5 in., any length	Add $\frac{5}{16}$ in. to each dimension of body	4 in.
Not wider than 7 in., any length	Add $\frac{9}{16}$ in. to each dimension of body	4 in.
Not wider than 8 in., any length	Add $\frac{5}{8}$ in. to each dimension of body	4 in.
Not wider than 11 in., any length	Add $\frac{11}{16}$ in. to each dimension of body	5 in.
Not wider than 12 in., any length	Add $\frac{3}{4}$ in. to each dimension of body	5 in.
Not wider than 18 in., any length	Add $\frac{7}{8}$ in. to each dimension of body	6 in.
Wider than 18 in., any length	Add $\frac{15}{16}$ in. to each dimension of body	6 in. to 8 in.

Figures 193 and 194 show end and side elevations of a register box for a 9 in.$\times$12 in. register. According to the table, the dimensions of the top will be $9\frac{11}{16}$ in.$\times 12\frac{11}{16}$ in.

End Elevation.—The end elevation is drawn according to the dimensions given in Fig. 193. A half-profile of the "neck" is drawn and divided into equal spaces and each space numbered. The neck is joined to the box by a "bead and flange" joint. The corners of the elevation are numbered 1, *A*, 2, 3, *B*, and 4 as shown.

Side Elevation.—A side elevation should be drawn according to the dimensions given in Fig. 194. The points 5, *C*, 6, 7, *D*, and 8 are numbered as shown.

Pattern of Ends.—First, any horizontal straight line (line 2–3 of

Digitized by Google

Fig. 195) is drawn equal in length to line 2–3 of Fig. 193. A perpendicular is erected at the point 2. The length of the slant height (line c–6 of Fig. 194) is set off from this perpendicular. The line

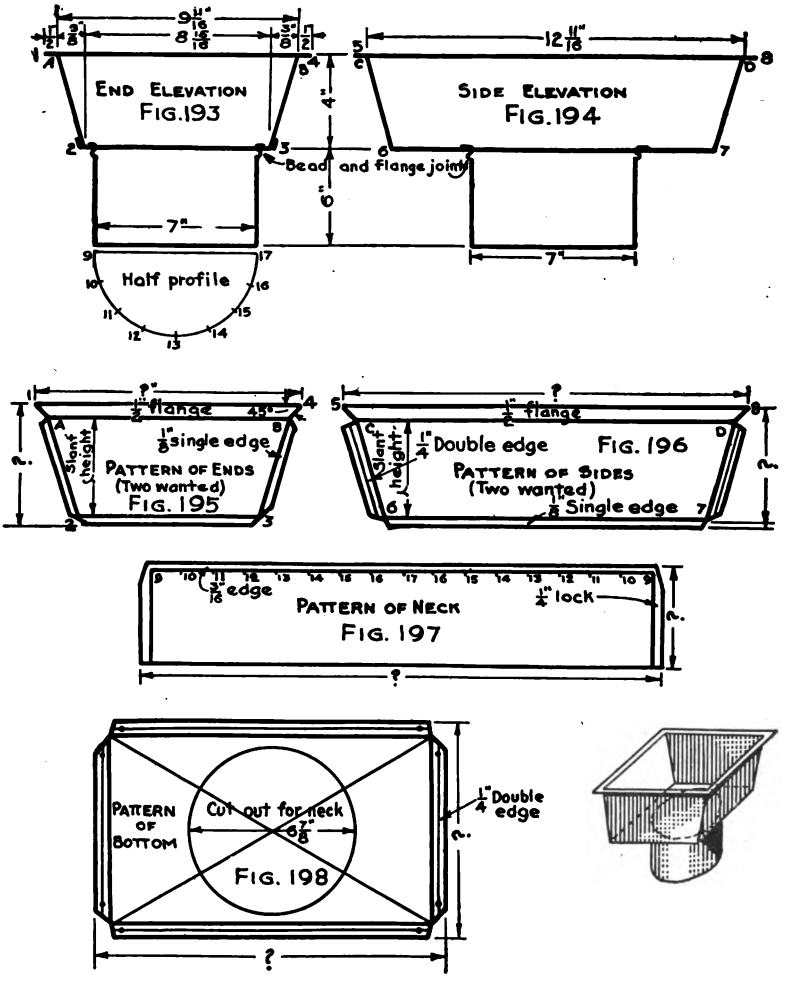

FIGS. 193–198.—Register Boxes.

A B is drawn parallel to line 2–3. The point A is located $\frac{3}{8}$ in. distance from the perpendicular. A $\frac{1}{8}$-inch single edge is added to edges 4–2, 2–3, and 3–B, and a $\frac{1}{2}$-inch flange is added to the top edge of the pattern, mitering the corners at an angle of 45°.

Digitized by Google

Pattern of Sides.—The pattern of the sides, Fig. 196, is produced in like manner. Instead of the single edge, however, a double edge is added to the edges that are to double seam onto the ends.

Pattern of Neck.—A line of stretchout, Fig. 197, is drawn and upon it is laid off twice as many spaces as there are in the half-profile of Fig. 193. Perpendiculars are erected at the points 9 and 9, Fig. 197. One-fourth inch edges are added to each end for the standard tin lock, and a $\frac{3}{16}$-inch edge for the bead and flange joint notching as shown in Fig. 197.

Pattern of Bottom.—A rectangle, Fig. 198, whose dimensions are $\frac{3}{4}$ in. less than the top dimensions of the box, is drawn. The center is located by drawing the diagonals of this rectangle. From this center, a circle whose diameter is $\frac{1}{8}$ in. less than the diameter of the neck, is drawn as shown in Fig. 198. This circle is cut out of the metal to provide an opening for the neck, and is always made smaller because the bead "draws in" when it is turned in the thick edge. A $\frac{1}{4}$-inch double edge is allowed on all sides to provide for double seaming the bottom to the body of the box. Over-all dimensions are placed on all views.

65. Related Mathematics on Register Boxes.—*Problem 34A.*—Furnace pipe tin is made in the sizes listed in the following table. Which size would you use in making the register box shown by Figs. 193 to 198 inclusive, in order to maintain as little waste as possible?

COKE TIN—FURNACE PIPE SIZES

Size of Sheet.	Wt. Per Box No. Sheets.	Corresponding Pipe Size.
20″×23″	165 lb.	7″
20″×26½″	190 "	8″
20″×29½″	211 "	9″
20″×32½″	233 "	10″
20″×36″	258 "	11″
20″×39″	290 "	12″

Problem 34B.—Any register has a series of holes cast in its face to correspond to some predetermined design. This design necessarily shuts off part of the opening, thereby retarding the flow of air through the register. Since most makers use nearly the same design, it has become the custom to deduct 33⅓ per cent of the area

Digitized by Google

of the body size, in order to obtain the free area of the register. Fill in, in the following table, the free areas of the register sizes given.

FREE AREAS OF REGISTERS

Size of Body.	Free Area (66⅔ per cent of body area).	Size of Round Pipe Required (See Problem 34C).
6″×10″		
8″×12″		
9″×12″		
9″×14″		
10″×12″		
12″×14″		
12″×16″		

Problem 34C.—Since a register cannot deliver more air than is conveyed to it, it is evident that the cross-sectional area of the round neck of the register box must equal the free area of the register. Using the formula, $D = \sqrt{\text{Free area} \div .7854}$, fill in the third column of the above table.

Digitized by Google

CHAPTER X

COMBINATIONS OF VARIOUS SOLIDS

Prob. No.	JOB	DRAWING OBJECTIVE	MATHEMATICAL OBJECTIVE
35	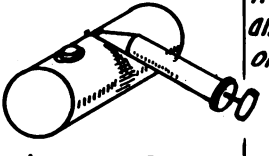 ATOMIZING SPRAYER	Assembly drawing and development of pattern.	Area of cylinders and cones. Cutting to advantage.
36	ASH PAN (Round end)	Combination of flat and curved surfaces.	Area of trapezoid, frustum of cone, and of circle.
37	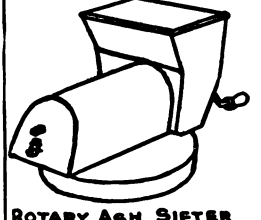 ROTARY ASH SIFTER	Assembly drawing. Development of pattern. Details of construction.	Computing areas of various parts.

Objectives of Problems on Combinations of Various Solids.

Digitized by Google

Problem 35

ATOMIZING SPRAYER

66. The Atomizing Sprayer.—This type of sprayer consists of a cylindrical tank or reservoir in which is soldered a small tube that reaches nearly to the bottom of the tank. Upon this tank is mounted a pump, having a nozzle in the form of a scalene cone, and with a relatively small orifice. The small tube is placed in the tank in such a manner that its top is directly in front of, and on a level with, the center of the orifice of the pump. When a stream of air is expelled from the pump, it creates a partial vacuum in the tube, causing the liquid to rise. When the liquid encounters the stream of air flowing from the pump, it is broken up into a fine spray.

The Elevation (Fig. 199).—A circle 4 in. in diameter is first drawn to represent the end of the reservoir. The elevation of the pump barrel is drawn next, placing it in a horizontal position and tangent to the reservoir. The following are next drawn in order: (1) The pump rod assembly; (2) the $\frac{1}{16}$-inch diameter tube in its proper location; (3) the wooden plug that guides the pump rod; (4) the brace, according to the dimensions given.

Pattern of Conical Nozzle (Fig. 200).—The elevation of the cone is reproduced and a half-profile attached directly to the base. This half-profile is divided into four equal parts. The shortest distance from the base to the apex is the line from point 1. Therefore, with point 1 as a center, arcs are drawn from points 2, 3, and 4 of the half-profile, cutting the base of the cone as shown in Fig. 200. With the apex as a center, arcs are drawn from each intersection of the base of the cone. Any point on the arc from point 1 is selected and is connected with the apex. This line will serve as the starting line of the pattern. The compass is set equal to the distance between any two divisions of the half-profile. Starting from point 1 of the pattern, point 2 is found by drawing an arc (with the compass as already set) that intersects the arc drawn from the second intersection of the base line of the cone. In like manner points 3, 4, and 5 can be located. A straight line from point 5 to the apex will give the half pattern. Since both halves are exactly equal, the other half may now be drawn by reversing the process already described. A $\frac{1}{4}$-inch lap should be added to one side of the pattern.

Digitized by Google

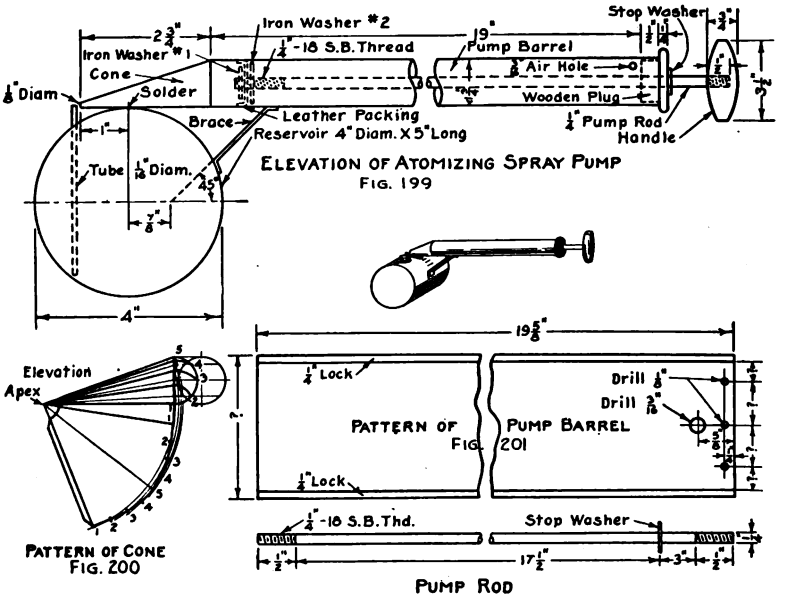

ELEVATION OF ATOMIZING SPRAY PUMP
FIG. 199

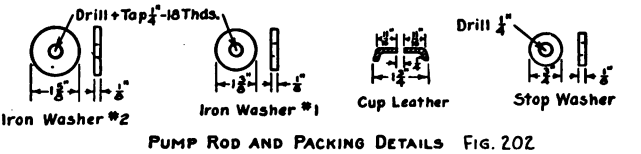

PUMP ROD AND PACKING DETAILS FIG. 202

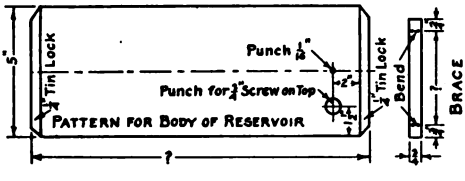

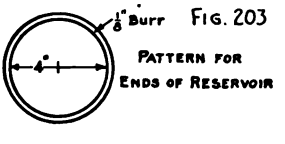

FIG. 203

SCHEDULE OF MATERIALS

ITEM	DETAIL No.	No. REQUIRED	MATERIAL
Cone		12	IX Char. Tin
Pump Barrel		12	"
Iron Washer #2		12	12 Gauge Tinned
Iron Washer #1		12	"
Stop Washer		12	"
Cup Leather		12	Stock Room
Pump Rod		12	Galv. Rod
Body of Reservoir		12	IX Char. Tin
Brace		12	"
Ends of Reservoir		24	"
Handles		12	Stock Room
Plugs (Maple)		12	"

REGULAR TITLE HERE

FIGS. 199–203.—Atomizing Spray Pump.

Digitized by Google

Pattern of Pump Barrel (Fig. 201).—The pump barrel blank is a rectangular piece of metal whose length is $19\frac{5}{8}$ in. ($\frac{1}{8}$ in. being added for joining to the nozzle), and whose width is ($1\frac{3}{4}$ in. $\times \pi$) $+ \frac{1}{2}$ in. for locks. A pattern of the pump barrel should be drawn as shown in Fig. 201. The $\frac{1}{8}$-inch screw holes should be equally spaced with the circumference of the barrel, the outside holes being $\frac{1}{8}$ of the circumference distant from the circumference lines, in order to bring the seam in the center. A $\frac{3}{16}$-inch hole must be provided, as shown, for a vent.

Pump Rod Details (Fig. 202).—The pump rod should be $21\frac{1}{2}$ in. long and should have a stop washer soldered $3\frac{1}{2}$ in. from one end. This stop washer prevents the leather packing from becoming injured by striking the nozzle. A $\frac{1}{4}$-inch standard stove bolt thread (18 threads per inch) is cut on each end of the rod for a distance of $\frac{1}{2}$ in. The thread near the stop-washer is intended to screw into wooden handle. Two iron washers of unequal diameter are drilled and tapped to receive the thread that is cut on the pump rod. The cup leather is clamped between these washers, the larger washer being on the side near the handle of the pump.

Pattern for Reservoir (Fig. 203).—The pattern for the body of the reservoir is a rectangle whose length equals ($4 \times \pi$) $+ \frac{1}{2}$ in. for locks, and whose width equals 5 in. A center line is drawn and the $\frac{1}{16}$-inch hole for the tube is located upon it. A hole for the $\frac{3}{4}$-inch screw can top is also located as shown in Fig. 203. The pattern for the ends of the reservoir is a circle 4 in. in diameter to which is added a $\frac{1}{8}$-inch burr to act as a lap for soldering the ends to the body. The brace is a rectangular piece of tin $\frac{3}{4}$ in. wide. The length of the brace is taken directly from the profile as it appears in Fig. 199.

Schedule of Materials.—When making a drawing of an article that has many parts, a schedule of material is included in the drawing. This schedule saves a large amount of description regarding material, etc., that would otherwise have to appear on the drawing for each part, thereby complicating the drawing and making it more difficult to read.

67. Related Mathematics on Atomizing Sprayer.—In planning an article that is to be manufactured the draftsman must constantly strive to keep the cost as low as possible. The largest items entering into the cost are material and labor. The various parts must be so designed that they will "cut to advantage" from

Digitized by Google

the stock sizes of sheets. However, there are cases where a small amount of extra wastage will be more than compensated for by the saving in labor. Figure 204 shows a layout that would preclude the possibility of using the squaring shears and the circular shears for cutting out the blanks.

It is evident that cutting must be done with the hand snips. While this would be desirable if but one sprayer were to be made, it would result in an increased labor cost in quantity production.

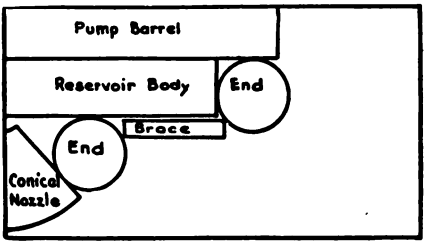

Fig. 204.

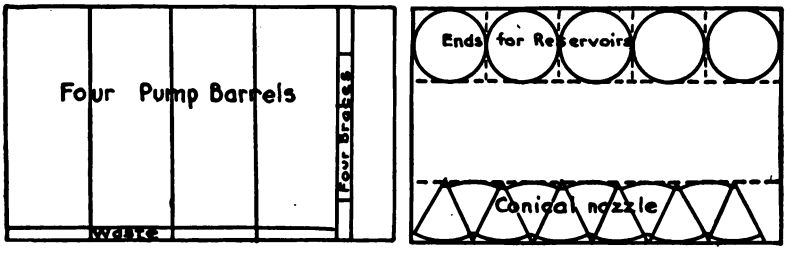

Fig. 205.

FIGS. 204–205.—Plan for Cutting Atomizing Spray Pump Parts from Sheets.

Figure 205 shows the method of arranging the pump barrel and brace patterns on the sheet in such a way that they can be cut in the squaring shears. The ends for the reservoir and the pump nozzles are arranged for cutting in the squaring shears by cutting along the dotted lines. After the sheet is cut into blanks, the circular ends may be cut true to shape in the circular shears. The nozzle, however, will have to be marked from a master pattern and the curved edges cut by the hand snips.

Digitized by Google

Problem 35A.—Show by means of sketches how the patterns for the atomizing sprayer should be arranged on the sheet in order to obtain the greatest saving in material and labor in the manufacture of twelve complete sprayers.

Problem 35B.—What is the percentage of waste per sprayer?

Digitized by Google

Problem 36

ASH PAN WITH SEMICIRCULAR BACK

68. Ash Pan with Semicircular Back.—Figure 206 shows the plan of an ash pan having a semicircular back. The sides and back flare $1\frac{1}{8}$ in., while the front of the pan flares $1\frac{1}{2}$ in. Figure 207 shows an elevation of the pan. The pan is made from five pieces of metal (two sides, front, back, and bottom), all joints being double seamed. The top is reinforced with No. 8 wire.

Pattern for Semicircular Back.—The plan and elevation are drawn according to the dimensions given in Figs. 206 and 207. An extension line is carried downward from the center from which the semicircular ends are drawn. Another extension line from the slant height (line 16-17 of Fig. 207) is drawn to intersect the first extension line, thereby locating the apex of the cone of which the semicircular end is a part. With the apex as a center, and a radius equal to the distance from the apex to point 17 in Fig. 207, the arc of stretchout, Fig. 208, is drawn. The spaces 2, 3, 4, 5, 6, 7, and 8, taken from similarly numbered spaces in Fig. 206, are set off upon this arc. The pattern is completed by an arc drawn from point 16, using the apex as a center. One-half inch locks are added to both edges of the pattern, a $\frac{3}{8}$-inch wire edge to the top and a $\frac{3}{16}$-inch single edge to the bottom of the pattern.

Pattern for Sides of Pan.—Extension lines are dropped from points 9, 13, and 8 of Fig. 206. At any convenient location the horizontal line 9–8 of Fig. 209 is drawn. Parallel to this line, and at a distance equal to line 16–17 of Fig. 207, the horizontal line 12–13 of Fig. 209 is drawn. The intersections of these lines with the extension lines previously drawn will determine the location of points 12 and 13. Lines 8–12 and 9–13 are drawn. A $\frac{3}{8}$-inch wire edge is added to the top, and a $\frac{3}{16}$-inch single edge to the bottom of the pattern. A $\frac{1}{2}$-inch double edge is added to side 9–13 for double seaming. These patterns must be formed "right and left" in making the pan. The rivet holes for the bail ears must be located as shown in Fig. 209.

Pattern for Front of Pan.—The line 9–1 of Fig. 211 is drawn equal in length to line 9–1 of Fig. 206. A line is drawn parallel to this line and at a distance equal to line 14–15 of Fig. 207. Perpendiculars are dropped from points 1 and 9 of Fig. 211 cutting

Digitized by Google

the line last drawn. A distance of $1\frac{1}{8}$ in. is measured in from each perpendicular in order to locate points 10 and 13. Lines 1–10

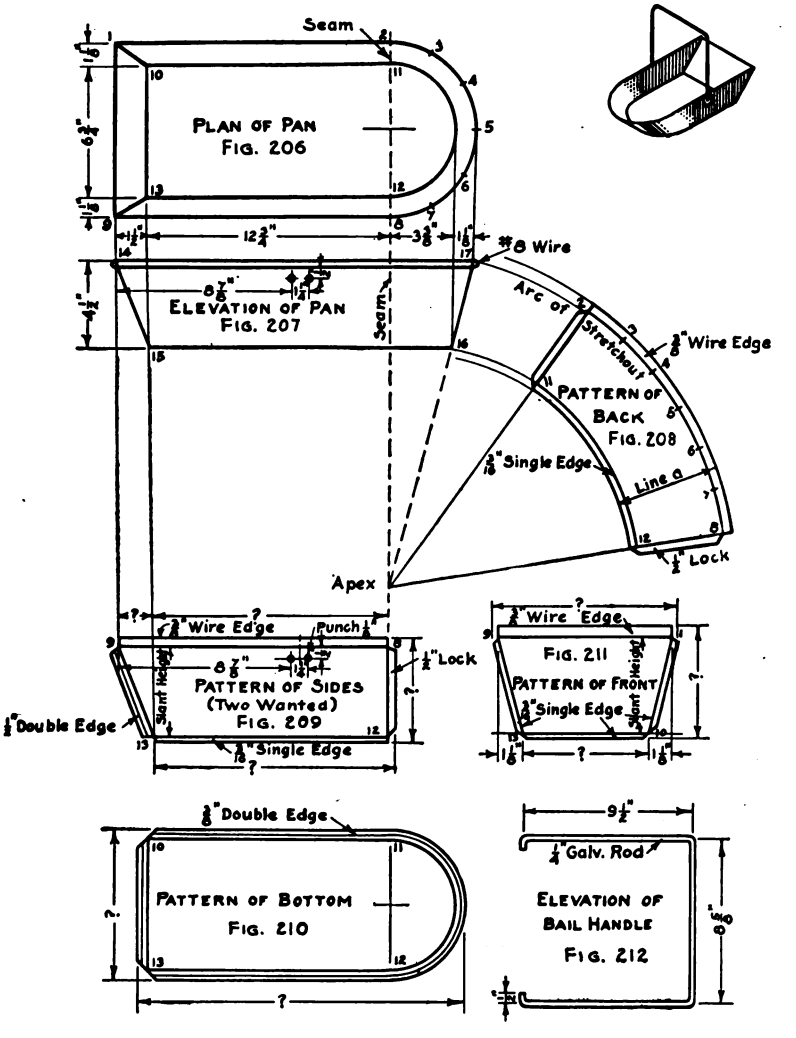

FIGS. 206–212.—Ash Pan with Semicircular Back.

and 9–13 complete the pattern. Three-sixteenths inch edges are added to the sides and to the bottom, and a $\frac{3}{8}$-inch wire edge to the top of the pattern.

Digitized by Google

Pattern of Bottom of Pan.—The profile of the bottom, Fig. 210, of the pan as shown in Fig. 206 should be reproduced, and a $\frac{3}{8}$-inch double edge added to all sides of this profile in order to double seam the bottom of the pan to the sides and ends.

The Bail.—The bail is made from galvanized $\frac{1}{4}$-inch rod, and is attached to the pan by bail ears. The bail ears are located "off center" to assure steadiness when carrying the pan. Figure 207 gives the location of the bail ears. An elevation of the bail, as shown by Fig. 212, is drawn. If care is taken to give center line measurements, the workman in the shop can "scale" his dimensions directly and, therefore, a pattern for the blank will not be needed.

69. Related Mathematics on Ash Pan.—*Problem 36A.*—What is the area of Fig. 208?

In solving this problem use the formula $\frac{B+b}{2} \times H = \text{Area}$

B = length of longest arc
b = length of shortest arc
H = length of "line a"

Problem 36B.—What is the total area of the sides (two wanted) as shown in Fig. 209?

Use the formula $\frac{B+b}{2} \times H = \text{Area}$

in which

B = lower base (over-all dimensions)
b = upper base (over-all dimensions)
H = total height between bases

Problem 36C.—What is the total area of Fig. 211?

Problem 36D.—What is the area of Fig. 210? Figure 210 is a combination of a rectangle and a semicircle.

Problem 36E.—How long must the wire be to stiffen the top edge of the pan? How much rod is needed to make the bail?

Problem 36F.—Number 24 gage black steel weighs 1.02 lb. per square foot. How much will the pan weigh exclusive of the bail and the top wire?

Digitized by Google

Problem 37

ROTARY ASH SIFTER

70. The Rotary Ash Sifter.—This problem on the rotary ash sifter presents a composite of nearly all of the pattern principles that have been given in the preceding problems.

Figure 213 shows a section and Fig. 214 an end elevation of the sifter. Extension lines should be used to establish the elevation positions of the views, but these are omitted from the drawing to avoid confusion of lines.

Pattern of Side (Fig. 215).—A line of stretchout is drawn and upon it is placed the spacing between letters *A*, *K*, *B*, *J*, *C*, *F*, *D*, and *H* as shown in Fig. 214. Measuring lines are drawn through each of these points. It should be noticed that points *E* and *D*, *G* and *H*, *M* and *A* fall on the same horizontal lines of Fig. 214. Because of this, they should be similarly placed in the stretchout, Fig. 215. Starting from point *A* of Fig. 213, an extension line intersecting measuring line *A* of Fig. 215 should be dropped. In like manner all points of intersection are located. Three-sixteenths inch single edges are added, where shown, to provide for double seaming, and a $\frac{3}{8}$-inch edge which is to be bent at right angles to receive the hook of the sliding cover, is allowed for.

Front End of Hopper (Fig. 216).—A line of stretchout is drawn first. Upon this line the distance *MK* of Fig. 213 is laid off. Measuring lines are drawn through these points. Extension lines from each end of the lines *M* and *K* are dropped until they intersect the measuring lines of Fig. 216. These points of intersection are connected by four straight lines to obtain the outline of the pattern. The necessary allowances, as shown, should be added. A notch must be cut out to provide for each hinge strap which is to be folded over the exposed wire and riveted to the cover.

Patterns for the *sliding cover*, *front end of outlet*, and *bridge* are developed by the same method as was the *front end of hopper*. The spaces *KJ*, *JH*, and *EFG* are taken from correspondingly lettered spaces of Fig. 213. The hook, shown in Fig. 218, is made of 1 in. $\times$ $\frac{1}{8}$ in. band iron.

Pattern for Cover of Barrel (Fig. 220).—The cover is made from one piece of metal, the rim being "flanged" as described in Chapter VII for the treatment of the ash barrel bottom. The width or

Digitized by Google

the opening is represented by line *DE* of Fig. 214, and the length by line *D–E* of Fig. 213. A $\frac{3}{8}$-inch double edge is added to the long sides and a $\frac{3}{16}$-inch single edge to the short sides of the opening The allowance for flanging must be computed by the formula

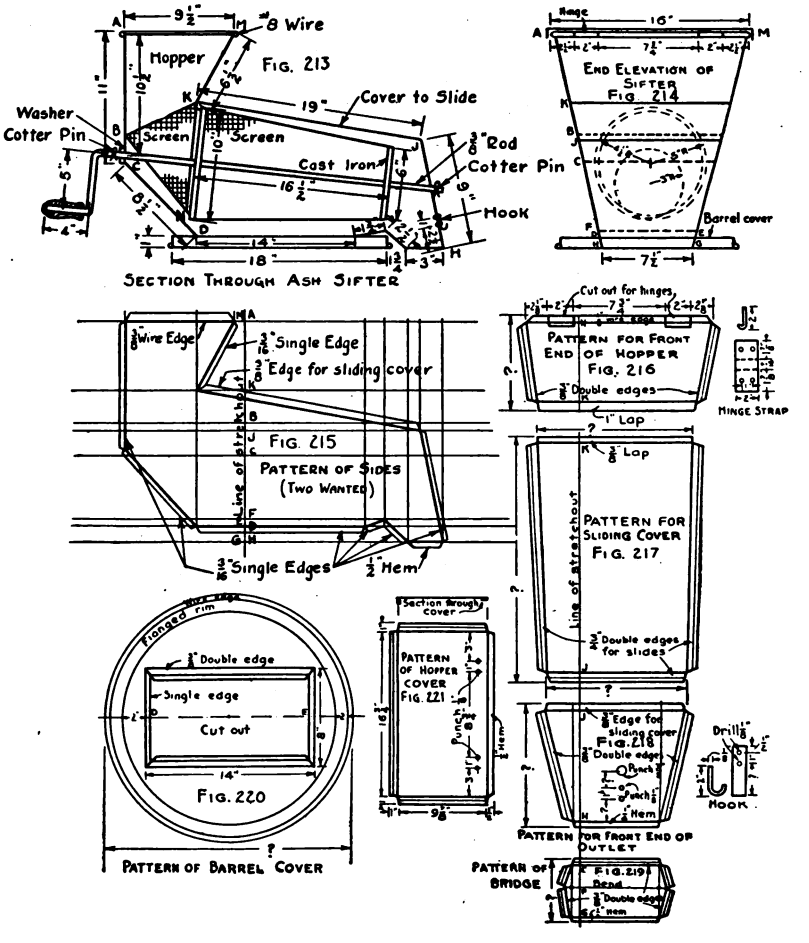

FIGS. 213–221.—Rotary Ash Sifter.

given in Chapter VII. Outside of this allowance a $\frac{3}{8}$-inch wire edge is provided for covering the wire.

Pattern for Hopper Cover (Fig. 221).—This pattern is a rectangle whose length equals line *AM*, Fig. 214, plus $\frac{3}{4}$ in. for clearing

Digitized by Google

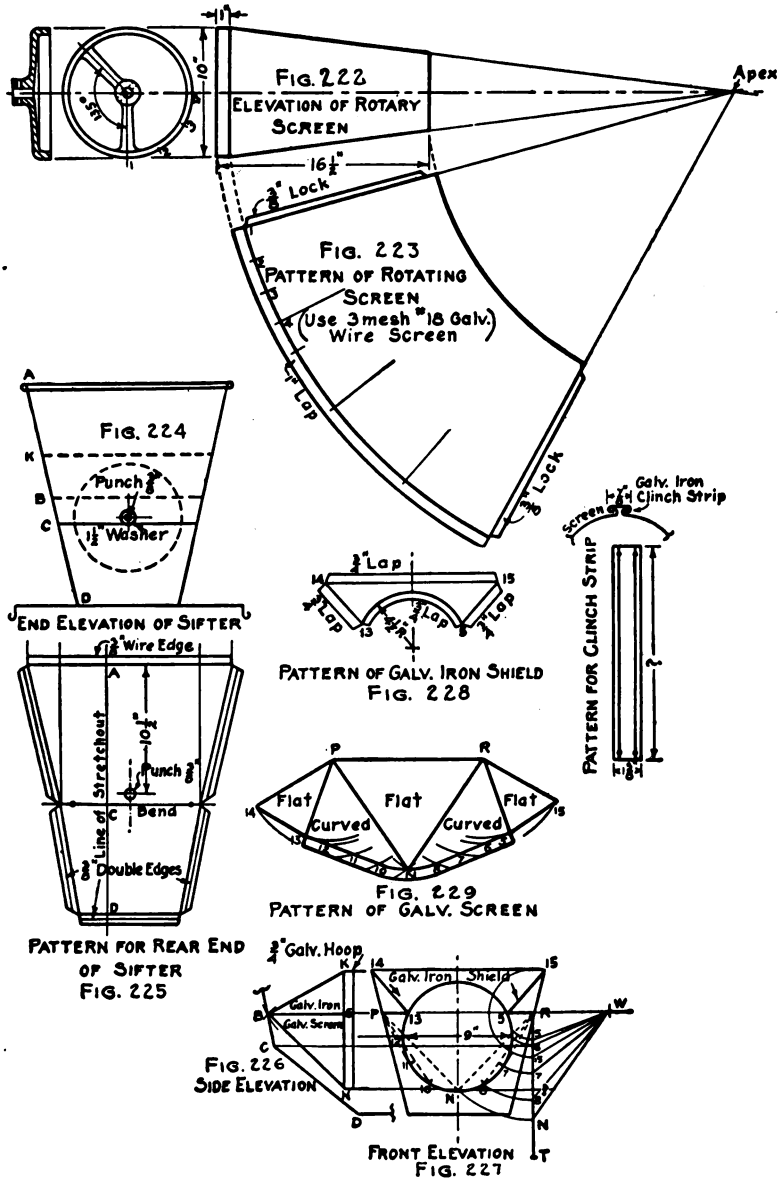

Figs. 222–229.—Patterns for Rotary Ash Sifter.

Digitized by Google

the wire, and whose width equals line *AM* of Fig. 213, plus $\frac{3}{8}$ in. for clearance. Rivet holes for the hinge straps should be laid out carefully. A double edge is provided on three sides to be formed according to the sectional view. A $\frac{1}{2}$-inch hem will serve to stiffen the cover at the hinged edge.

Pattern of Rotating Screen (Fig. 222).—The rotating screen is made of 3 mesh No. 18 wire galvanized netting. It is in the form of a frustum of a cone as shown by Fig. 222. A cast-iron frame, shown to the left of Fig. 222, is provided for each end of the screen. The outer face of this frame is tinned and the netting is soldered to it. The edges of the screen have a $\frac{3}{8}$-inch lock turned outward, and a galvanized-iron clinch strap is slipped on, hammered down, and the whole seam "tacked" with solder. The pattern of the frustum, Fig. 223, is obtained in the manner described in Chapter V.

Pattern of Rear End (Fig. 225).—A rear elevation of the sifter is drawn as shown in Fig. 224, all dimensions being taken from Figs. 213 and 214. A line of stretchout is drawn and upon it are set off the spaces *AC* and *CD* of Fig. 213. Measuring lines can now be drawn and extension lines dropped from points *A*, *C*, and *D* of Fig. 224. Straight lines connecting points of intersection will give the outline of the pattern. A $\frac{3}{8}$-inch wire edge should be added to the top, and $\frac{3}{8}$-inch double edges to the other three sides.

Pattern for Galvanized Screen (Fig. 229).—Figure 226 shows that part of the sectional view, Fig. 213, that has to do with the screen and shield, while Fig. 227 is a front elevation. The pattern for the galvanized iron shield is copied directly from Fig. 227, and the necessary laps added as shown by Fig. 228. The line *PR* is extended to the right of Fig. 227, making *RW* equal in length to *BS* of Fig. 226. With *R* as a center, arcs are drawn from points 15, 5, 6, 7, 8, and *N*, cutting the line *RT*, which is drawn at right angles to *RW*. At any convenient point, a line *PR*, Fig. 229, is drawn equal in length to line *PR* of Fig. 227. With *R* and *P* of Fig. 229 as centers, and a radius equal to *WN* of Fig. 227, arcs interesting at point *N* are drawn in. With *P* and *R*, Fig. 229, as centers and radii equal to *W*–8, *W*–7, *W*–6, *W*–5, and *W*–15 arcs bearing away from point *W* are drawn. Starting at point *N* of Fig. 229, the distances *N*–8, 8–7, 7–6, etc., should be made equal to distances *N*–8, 8–7, 7–6, etc., of the profile of the circle in Fig. 227.

Digitized by Google

The straight lines setting forth the flat and curved surfaces should be drawn in. A 1-inch lap is added to the curved surfaces.

71. Related Mathematics on Rotary Ash Sifter.—

Areas of Trapezoids.

Problem 37A.—What is the area of Fig. 216? Of Fig. 217? Of Fig. 218? Of Fig. 219? Of Fig. 225?

Area of Circle.

Problem 37B.—Find the area of Fig. 220, using the over-all dimensions. What per cent of the metal is cut away for the opening?

Area of Rectangle.

Problem 37C.—Compute the area of Fig. 221 by using the over-all dimensions.

Areas of Triangles.

Problem 37D.—Divide the pattern of the sides of Fig. 225 into triangles and compute the area of each.

Problem 37E.—What is the combined total area of both sides?

Problem 37F.—Treating Fig. 229 as a combination of triangles, what is its area?

Frustums of Cones.

Problem 37G.—What is the area in square inches of Fig. 223?

Problem 37H.—By drawing the imaginary line between points 5 and 13, Fig. 228 would be converted into a trapezoid. What would be its area?

Problem 37–I.—What is the combined area of all of the patterns required for the rotary ash sifter?

Digitized by Google

CHAPTER XI

FRUSTUMS OF CONES

Prob. No.	JOB	DRAWING OBJECTIVE	MATHEMATICAL OBJECTIVE
38	CUP STRAINER	Cone intersected by another cone.	Area of frustum of cone of rev.
39	TIN DIPPER	Standard sizes Pattern of "boss."	Volume of frustum of cone of rev.
40	LIQUID MEASURES	Development of lip pattern. Development of "handle boss"	Solving for unknown dimension.

Objectives of Problems on Frustums of Cones.

Digitized by Google

Problem 38

CUP STRAINER

72. The Cup Strainer.—This problem introduces the principles that apply when two cones intersect each other. Figure 231 is an elevation of the cup strainer. The body is a frustum of a cone whose apex is noted upon the drawing as Apex No. 1. The handle of the strainer is also a cone and miters upon the conical body as shown in Fig. 231. When two cones miter upon each other in this manner, the miter line must be developed.

Developing the Miter Line.—The elevation of the cup strainer, Fig. 231, should first be drawn according to the dimensions given. The body and handle should have their sides extended to determine the apex of each. The half-profile of the handle is then drawn and divided into equal spaces. After numbering each space, perpendicular lines are drawn to the base of the cone. From these points, extension lines are drawn to Apex No. 2. Directly above the elevation, a half plan of the handle is drawn using extension lines to locate the view properly. A quarter-profile, Fig. 230, is drawn and the spacing of the half-profile of Fig. 231 is transferred in such a way that point 1 falls on the horizontal center line. An extension line is drawn from point 2 perpendicular to the base line and thence to Apex No. 3. Perpendicular lines are now drawn from the points of intersection of extension lines 2 and 3 of Fig. 231 and the slant height of the body, until they meet the horizontal center line of Fig. 230. With one point of the compass on the center of the profile of the body, Fig. 230, arcs *A* and *B* are drawn. Extension lines should now be carried back from the points of intersection of arcs *A* and *B* with line 2 until they intersect lines 2 and 3 in Fig. 231. The curved miter line is now drawn in as shown.

Developing the Pattern for Handle.—From each intersection of the miter line in Fig. 231, lines intersecting the slant height should be drawn parallel to the base of the cone. These intersections are shown by letters, *c*, *d*, *e*, and *f*, in Fig. 231. The arc of stretchout is now drawn and the spacing of the profile transferred with numbers to correspond.

From each point on the arc of stretchout, Fig. 232, lines are drawn to Apex No. 2. Arcs should now be drawn from points

Digitized by Google

c, *d*, *e*, and *f* of Fig. 231 over into the stretchout. Points of intersection can be determined by starting from the half-profile, tracing the extension line to the miter line, and thence to a correspond-

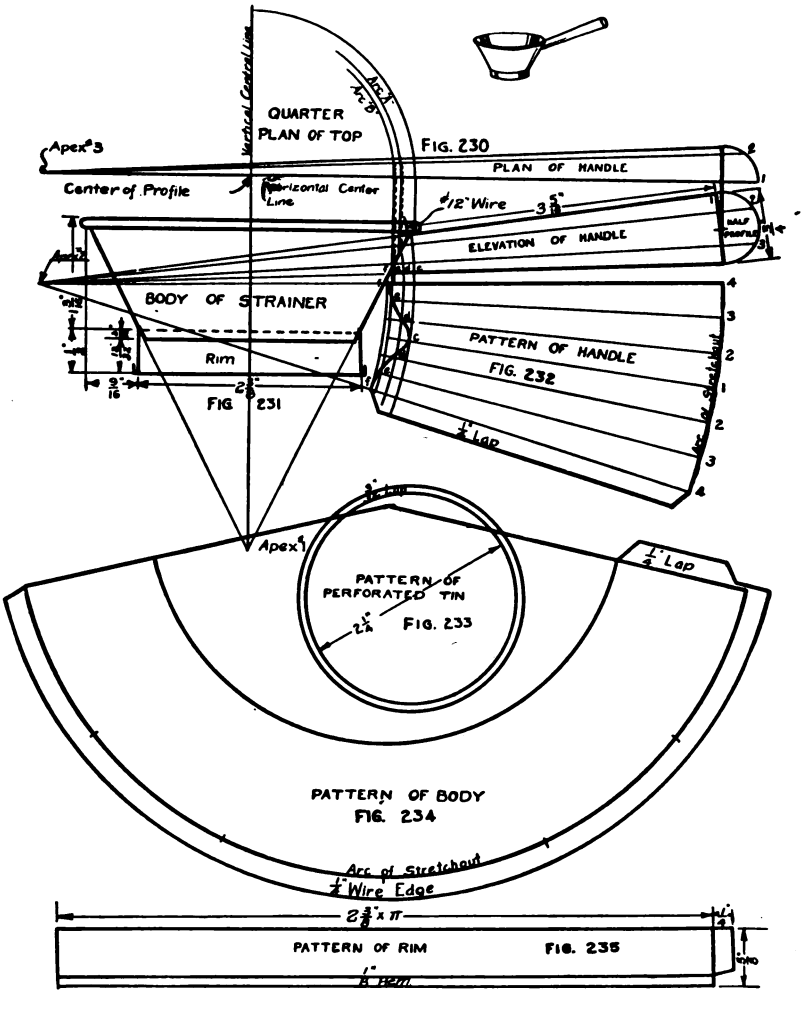

FIGS. 230–235.—Cup Strainer.

ingly numbered line in the stretchout. A curved line drawn through these intersections will give the miter cut of the pattern. A $\frac{1}{4}$-inch lap should be added to one side of the pattern.

Digitized by Google

Pattern of Body.—An arc of stretchout, Fig. 234, should be drawn whose radius is equal to the distance from Apex No. 1 to the top of the body. Six spaces each of which are equal to the radius of the top are set off upon this arc. The first and last points should be connected to the center from which the arc of stretchout was drawn. Another arc is now drawn by using the same center and a radius equal to the distance from Apex No. 1 to the bottom of the body in Fig. 231. A $\frac{1}{4}$-inch lap is added to one side of the pattern, and a $\frac{1}{4}$-inch wire edge to the top edge.

Figure 233 shows the pattern of the perforated tin strainer. The diameter of this blank is equal to the diameter of the body, Fig. 231,with a $\frac{3}{32}$-inch lap added all around.

Figure 235 is the pattern of the rim. Since the rim is a cylinder, its pattern will be a rectangle whose length is equal to $2\frac{3}{8}$ in.$\times\pi$, and whose height is equal to $\frac{1}{2}$ in. plus a $\frac{1}{8}$-inch hem. A quarter-inch lap should be added to one side of the pattern.

73. Related Mathematics on Cup Strainer.—*Problem 38A.*—What is the area in square inches of the body pattern?

Problem 38B.—What is the area of the pattern of the handle?

Problem 38C.—Show by means of a sketch a method of cutting the blanks required for the manufacture of twelve cup strainers, that will leave a minimum amount of waste.

Note.—The formula for the frustum of a cone is given in Chapter V.

Digitized by Google

Problem 39

SHORT HANDLED DIPPER

74. Short Handled Dipper.—The dipper presents a problem in which three right cones are mitered. The elevation, Fig. 236, is drawn and dimensioned. The handle of the dipper is raised about 10° above the horizontal, although there is no set rule governing this feature. The boss is also drawn to suit the ideas of the designer.

Pattern of Boss.—Figure 237 is a reproduction of the elevation of the boss and that part of the dipper that is adjacent to it. The sides of the boss are extended to form a right cone. This right cone is cut by two planes, the surface of the body being one cutting plane, and the line of junction between the boss and the handle, the other. A half-profile is drawn directly upon the base of the cone, and divided into equal parts. These parts are numbered and extension lines drawn from each division, perpendicular to the base of the cone. From each intersection of the base, lines are drawn to the apex.

A half plan of the boss is drawn directly above the elevation. A quarter-profile is attached to the half plan, with divisions and numbers that correspond to the profile in the elevation.

From each point of intersection on the slant height of the body dotted extension lines are carried up to the horizontal center line of the plan. Using the center of the top as a center point, arcs are drawn from each intersection of the dotted lines and the horizontal center line. These arcs intersect extension lines drawn from the base to the apex in the half plan. Perpendicular lines are now carried back to correspondingly numbered extension lines in the elevation. A curved line passing through the points thus obtained will be the developed miter line.

An arc of stretchout is drawn using a radius equal to the distance from the apex to point 4. Upon this arc are placed twice as many spaces as there are in the half-profile, with numbers to correspond. Measuring lines are drawn from each of these divisions, to the apex.

From each intersection of both miter lines, extension lines are drawn parallel to the base of the cone until they intersect the slant height. From each of these points, extension arcs are drawn

Digitized by Google

until they meet correspondingly numbered measuring lines in the stretchout. Curved lines drawn through these intersections will give the miter cuts of the pattern. A small lap is added to one side of the pattern.

The pattern of the handle, Fig. 239, is obtained in exactly the

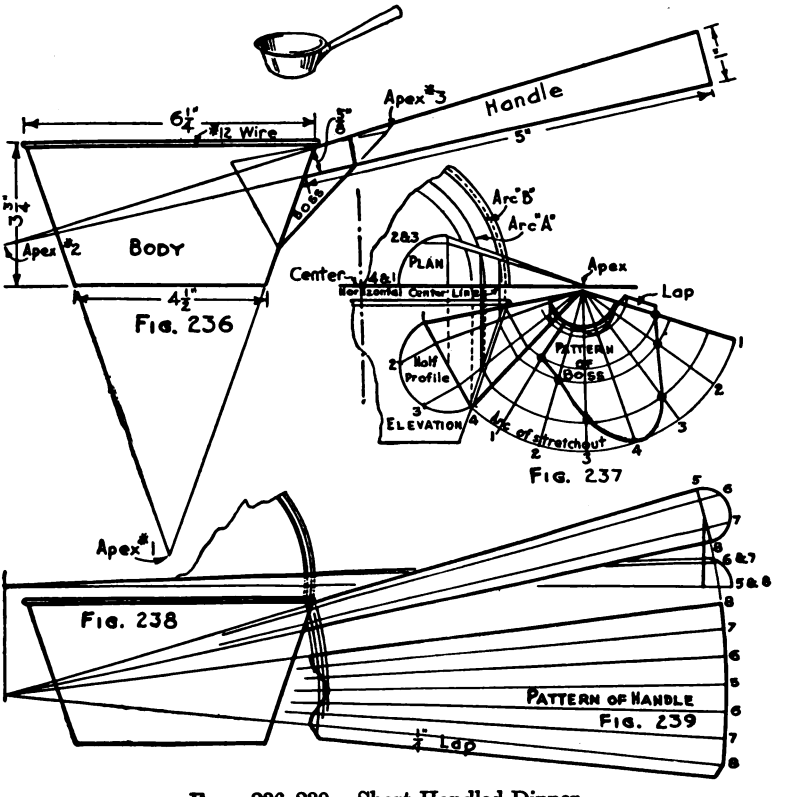

Figs. 236–239.—Short Handled Dipper.

same way as was the handle for the Cup Strainer, and needs no further explanation.

The pattern for the body is that of a frustum of a right cone. This development has been explained in previous problems and will not be shown on this drawing. It may, however, be mentioned that the bottom of a dipper is always double seamed to the body, and, therefore, proper allowances must be added to the pattern for this purpose.

Digitized by Google

75. Related Mathematics on Short Handled Dipper.—*Volume of a Frustum of a Cone of Revolution.*—The frustum of a cone has a circular top and a circular base. These are known as the upper and lower bases of the frustum. The altitude of the frustum is the shortest distance between the upper and lower bases, and is always measured perpendicularly. The volume of a frustum is found by adding together the area of the upper base, the area of the lower base, and the square root of the product of the upper base area times the lower base area; the sum of these quantities is then multiplied by one-third of the altitude.

Expressed as a formula

$$V=(B+b+\sqrt{B\times b})\times H\div 3$$

in which

V = Volume
B = Upper base area
b = Lower base area
H = Altitude

In applying this formula to Fig. 236, the areas of the upper and lower bases must first be computed.

Area of Circle $=D^2\times .7854$ (Chapter II)
$6\frac{1}{4}{}^2\times .7854=30.68$ area of upper base
$4\frac{1}{2}{}^2\times .7854=15.904$ area of lower base

Known values can now be substituted in this formula

$$V=(30.68+15.904+\sqrt{30.68\times 15.904})\times 3\tfrac{3}{4}\div 3$$

Performing the arithmetic:

$$3\tfrac{3}{4}\div 3=\frac{\overset{5}{\cancel{15}}}{4}\times\frac{1}{\cancel{3}}=1\tfrac{1}{4}$$

$$\begin{array}{r} 15.904 \\ 30.68 \\ \hline 127232 \\ 95424 \\ 477120 \\ \hline 487.93472 \end{array}$$

$$\begin{array}{r|l} \sqrt{487.9347} & 22.08+ \\ 4 & \\ \hline 42 \mid 087 & \\ 84 & \\ \hline 4408 \mid 3\ 9347 & \\ 3\ 5264 & \\ \hline 4083 & \end{array}$$

Digitized by Google

The formula will now stand,

$$V = (30.68 + 15.904 + 22.08) \times 1\tfrac{1}{4}$$

or 85.83 cu. in.

Solution·

15.904	68.664
30.68	1.25
22.08	
	343320
68.664	137328
	68664
	85.83000

Ans. 85.83 cu. in.

There are 231 cubic inches in one gallon and the capacity of this dipper would be $\frac{85.83}{231}$ or .37 gallon.

Problem 39A.—What would be the capacity in cubic inches of a dipper whose dimensions are as follows: Diameter of top, $7\frac{1}{4}''$; diameter of bottom, $5\frac{1}{4}''$; altitude or depth, $4\frac{1}{2}''$?

Problem 39B.—What would be the capacity in quarts of the dipper described in Problem 39A?

Digitized by Google

Problem 40

LIQUID MEASURES

76. Liquid Measures.—The body of the measure should first be drawn and its side extended to locate the apex. Figure 240 shows such a view of the body with a half-profile attached to its top edge. This half-profile is divided into equal parts, and extension lines carried from each division to the top edge of the body.

Pattern of Body.—With a radius equal to the distance from the apex to point 7 of Fig. 240, an arc of stretchout, Fig. 241, is drawn. The spacing of the half-profile is transferred to the arc of stretchout with numbers to correspond. Straight lines are now drawn from the apex through points 1 and 7, continuing downward indefinitely. An arc drawn from the apex, with a radius equal to the distance from the apex to the point *J*, completes the half pattern of the body. A $\frac{1}{4}$-inch wire edge is added to the top of the pattern. A $\frac{1}{4}$-inch lock and a $\frac{1}{8}$-inch single edge for double seaming are added as shown in Fig. 241. The half pattern is revolved about line 7 of Fig. 241 in order to obtain the full pattern.

Elevation of Lip.—The lip should now be added to the elevation of the body. In constructing the elevation of the lip, a point *H* is selected $1\frac{1}{8}$ in. below the top edge of the body on the center line. Straight lines are drawn from this point through and beyond points 1 and 7. Point *A* is located $\frac{1}{2}$ in. from point 1, and point *G* is located $1\frac{1}{2}$ in. from point 7. The line *AG* completes the elevation. Extension lines must now be drawn from the apex (point *H*) cutting the top of the lip at points *A*, *B*, *C*, *D*, *E*, *F*, and *G*. From these points, horizontal lines are now shown intersecting the line *HG*, which is the slant height of the cone.

Pattern of Lip.—In any convenient space, an arc of stretchout, Fig. 242, is drawn with a radius equal to line *H*–1 of Fig. 241. Twice as many equal spaces are set off on this arc as there are spaces in the half-profile, with numbers to correspond. Measuring lines are now drawn from the point *H* through and beyond each division of the arc of stretchout. The distance 1–*A*, on line *HA* of Fig. 242, is exactly equal to distance 1–*A* of Fig. 240. Distances *HB*, *HC*, *HD*, *HE*, and *HF* of Fig. 242 are obtained by measuring the distances from point *H* to the inter-

Digitized by Google

sections of the horizontal lines that were previously drawn from points *B*, *C*, *D*, *E*, and *F*, and the slant height (line *HG*) of Fig.

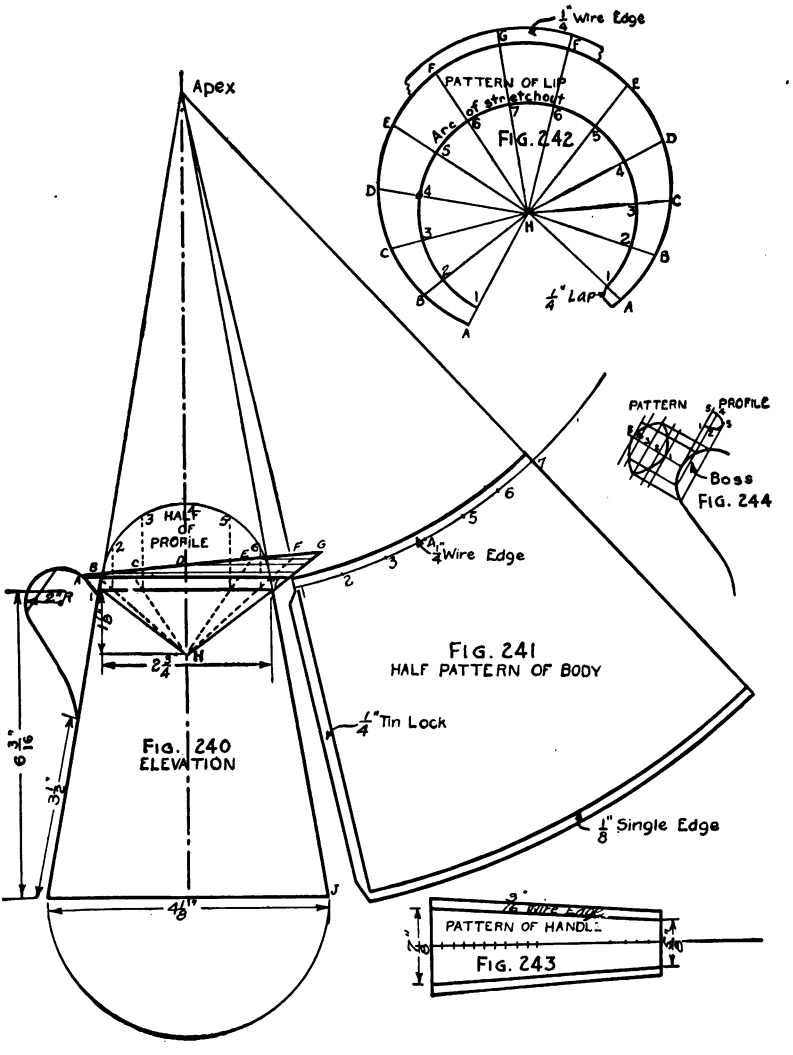

FIGS. 240–244.—Measure for Liquids.

240. Distance *HG* is taken directly from line *HG* of Fig. 240 because it is the slant height, and, therefore, a true length.

Digitized by Google

A curved line traced through the points thus obtained completes the pattern for the lip. A $\frac{1}{4}$-inch wire edge and a $\frac{1}{4}$-inch lap should be added as shown.

Pattern of Boss.—The pattern of the boss, Fig. 244, is obtained by drawing a profile in its proper location as shown. This profile is divided into four equal spaces and extension lines carried from each division, intersecting the elevation of the handle. A line of stretchout is next drawn with spacing and numbers to correspond to the profile. Measuring lines should now be drawn and intersected by extension lines drawn from the elevation. A curved line drawn through the points thus obtained will give the pattern of the boss.

Pattern of Handle (Fig. 243).—Upon any straight line, the distance around the handle profile, shown in Fig. 240, is set off. Perpendiculars are erected at the first and last points. The upper end of the handle is obtained by setting off $\frac{7}{16}$ in. on each side of the horizontal line, and the lower end by setting off $\frac{5}{16}$ in. on each side of the horizontal line. The pattern is completed by adding $\frac{3}{16}$-inch wire edges to each side of the handle. The pattern for the bottom (not shown) is a circle whose diameter is equal to the finished diameter ($4\frac{1}{8}$ in.) plus a $\frac{1}{4}$-inch edge for double seaming to the body. The actual diameter of the pattern would be $4\frac{1}{8}$ in. $+\frac{1}{4}$ in. $+\frac{1}{4}$ in. $= 4\frac{5}{8}$ in.

77. Related Mathematics on Liquid Measures.—*Problem 40A.*—Compute the capacities of the measures given in the following table:

STANDARD SIZES FOR FLARING LIQUID MEASURES

Diameter of Bottom.	Diameter of Top.	Height (Altitude).	Capacity.
$2\frac{1}{4}$ in.	$2\frac{1}{16}$ in.	2 in.	
$2\frac{1}{2}$ "	$2\frac{1}{4}$ "	$3\frac{1}{4}$ "	
3 "	$2\frac{11}{16}$ "	$4\frac{9}{16}$ "	
4 "	$3\frac{1}{4}$ "	$4\frac{5}{8}$ "	
$5\frac{3}{16}$ "	$3\frac{3}{4}$ "	$7\frac{5}{16}$ "	
$6\frac{1}{2}$ "	5 "	$8\frac{7}{16}$ "	
$8\frac{3}{4}$ "	$6\frac{3}{4}$ "	$9\frac{3}{4}$ "	
$10\frac{1}{2}$ "	8 "	$10\frac{1}{4}$ "	
11 "	$8\frac{1}{2}$ "	$12\frac{5}{16}$ "	
$12\frac{1}{2}$ "	$9\frac{1}{2}$ "	$12\frac{1}{16}$ "	

Digitized by Google

Problem 40B.—A customer wishes a $2\frac{1}{2}$ gallon flaring measure. The bottom of this measure is to be 9″ in diameter, and the top 7″ in diameter. How high must the measure be made to fulfill these requirements?

Example of Problem 40B.—Suppose the dimensions were 6″ diameter of bottom, 4″ diameter of top, and the measure was to hold 3 quarts.

Original Formula $V=(B+b+\sqrt{B\times b})\ H\div 3$

Transposing, $H\div 3=V\div(B+b+\sqrt{B\times b})$

In this formula, $H=$ Altitude, which is the unknown

$V=$ Volume $=3$ quarts or 173.25 cu. in.

$B=$ area of lower base $=6^2\times .7854=28.274$ sq. in.

$b=$ area of upper base $=4^2\times .7854=12.566$ sq. in.

Substituting known values in above formula,

$$H\div 3=173.25\div(28.274+12.566+\sqrt{28.274\times 12.566})$$

and $$H\div 3=173.25\div 59.69$$

$$H\div 3=2.9$$

$$H=2.9\times 3=8.7 \text{ in.} \qquad \textit{Ans.}\ 8.7 \text{ in. high.}$$

Digitized by Google

CHAPTER XII

RETURN AND FACE MITERS

Prob. No.	JOB	DRAWING OBJECTIVE	MATHEMATICAL OBJECTIVE
41	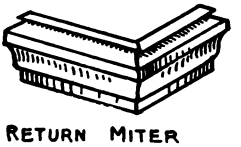 RETURN MITER	*Introducing the principles of development used for miters in mouldings and cornices.*	
42	CONDUCTOR HEAD	*Applying the principles of miter development to square return miters.*	*Estimating weight and cost of conductor head.*
43	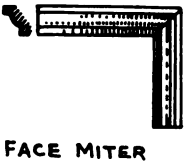 FACE MITER	*Applying the principles of miter development to square face miters*	
44	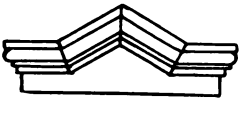 WINDOW CAP	*Applying the principles to face miters at other than right angles*	

Objectives of Problems on Return and Face Miters.

Digitized by Google

Problem 41

SQUARE RETURN MITER

78. Square Return Miter.—Figure 245 shows the profile of a moulding. Mouldings are seldom of standard design, although the architect builds up a given design from standardized parts or members. In the profile shown, the compound curve is known as an ogee. This shape is encountered more frequently in mouldings than any of the others. Line 9–10 of Fig. 245 is often referred to as a "fascia," which is a plain band or surface below a moulding. Line 10–11 of Fig. 245 forms the drip of the moulding since it compels the water, flowing down the surface of the moulding, to drop off. The lines 11–12 and 12–13 are called fillets. Fillets are narrow plain surfaces used to separate curved members of a moulding, or to finish a moulding. On a moulding of this design the fillet 12–13 is intended to enter a reglet (slot) in the side wall of the building.

In drawing the ogee curve, a square, 3–*A*–9–*B*, Fig. 245, is drawn whose sides are equal in length to the desired height of the member. A horizontal center line *CD* is then drawn and from points *C* and *D* the curves forming the ogee are drawn. This gives an ogee whose height equals its projection. Architects often modify this curve in order to gain height without attaining too great projection.

After the profile is drawn it should have all of its curved lines divided into equal spaces. Numbers should be placed at each angular bend (vertex) and at each division of the curved lines. A line dropped from points 2 and 13 will show the entire width or projection of the moulding, Fig. 246. If this width is carried around the corner at an angle of 90°, a plan of a square return miter will result. The miter line, as shown in Fig. 246, must always bisect the angle formed by the sides of the moulding.

Lines should be dropped from every point in the profile, downward through the plan, an indefinite distance. A line of stretchout should now be drawn at right angles to the side of the plan as shown in Fig. 247. Every space in the profile is now transferred to the line of stretchout, care being taken to get them in their proper sequence, and to have the numbers correspond. Measuring lines are drawn through each division at right angles to the line of stretchout.

Digitized by Google

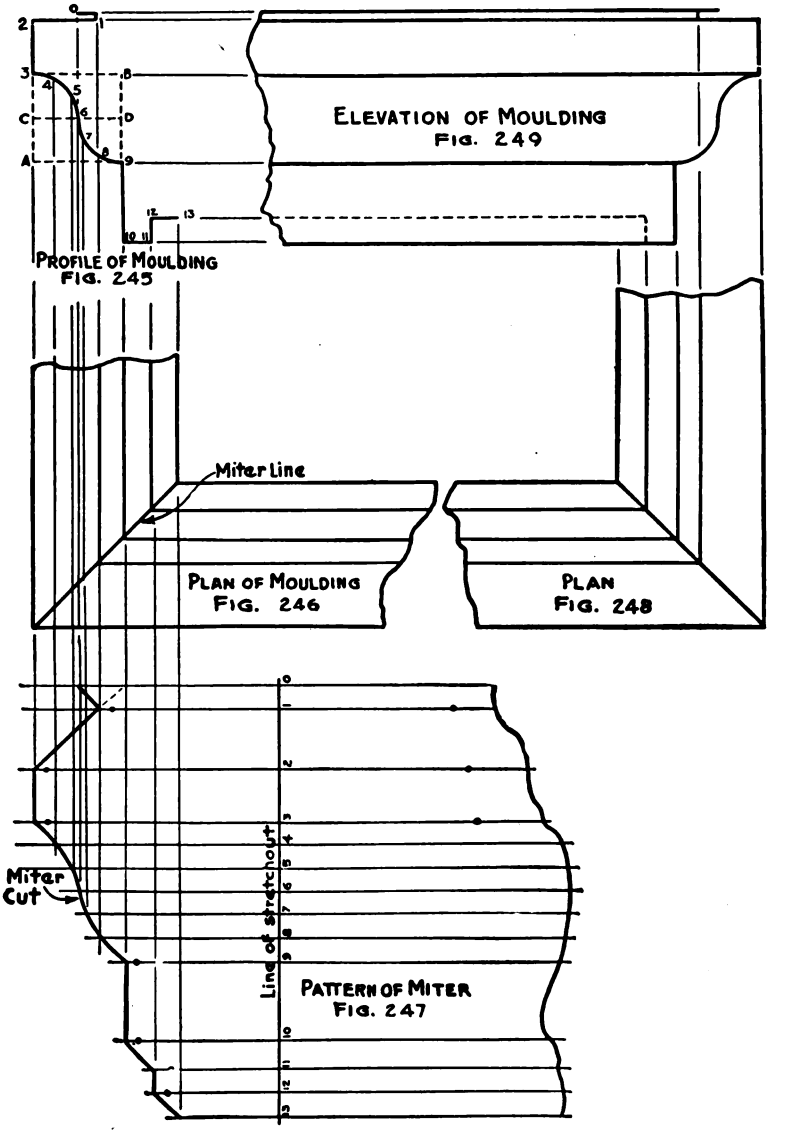

FIGS. 245–249.—Square Return Miter.

Digitized by Google

Starting at point 1 of the profile, the extension line should be followed downward until it intersects line 1 of the stretchout. In like manner all of the intersections should be located and marked with small circles. The miter cut may now be drawn in by connecting the intersections of the stretchout by straight and curved lines. It should be observed that curved lines in a profile will always produce curved lines in the pattern, and straight lines in the profile will produce straight lines in the pattern.

Figure 248 represents the moulding carried around another corner. Extension lines are carried upwards from this view and are intersected by correspondingly numbered extension lines from the profile. In this manner an elevation, Fig. 249, of any miter may be projected.

It should be observed that the plan, Fig. 246, plays no part in the development of the pattern, the extension lines from the profile remaining unchanged in passing through this view. This is true of all square (90°) return miters. However, if the miter was at any other angle, say 87°, the extension lines would be deflected by the changed position of the miter line, and a plan view would be absolutely necessary for the development of the pattern.

Digitized by Google

Problem 42

CONDUCTOR HEAD

79. Conductor Head.—Conductor heads are used to ornament the conductor pipes of a building and are usually placed at the point where the "goose neck" from the gutter enters the conductor. As shown by the dotted lines in Fig. 250, a short piece of rectangular or round pipe is carried through the head in order to give a more direct travel to the water.

Conductor heads are made in a great variety of shapes and sizes. On the better class of buildings, they are designed to harmonize with the particular style of architecture adopted.

Figure 250 shows a front elevation of a conductor head. Since, as was explained in the preceding problem, the pattern may be taken directly from the profile as it appears in the elevation, the curved lines may be divided into small parts. It will be noticed that the space between points 20 and 21 is less than that between the other points. This is perfectly permissible, as long as the same distance appears between points 20 and 21 on the line of stretchout, and saves much time that would otherwise have to be spent in making all spaces exactly equal. The dividers are set at any radius not too large and the curve is spaced off, allowing the last space to come wherever it may.

A center line is drawn in Fig. 250 and extended downward to serve as a line of stretchout for Fig. 252. The spacing of the profile is now transferred to this line and numbered to correspond. Measuring lines are drawn at right angles to the line of stretchout and intersected by extension lines dropped from correspondingly numbered points in Fig. 250. The miter cut of one side of the pattern is now drawn in.

Since both sides of the front (as divided by the center line) are symmetrical, the distances from the center line of Fig. 252 to each point in the miter cut should be transferred to the other side, thereby obtaining the necessary points for drawing in the other miter cut of the pattern for the front.

The side elevation, Fig. 251, is now drawn and the pattern developed by the method already described for obtaining the pattern of the front. Laps are added and notched as shown in Fig. 253. Two of these patterns must be cut from the metal and while they

Digitized by Google

are both alike, it is evident that they must be formed in pairs; that is, one right-hand and one left-hand, in order to attach them to the front of the head.

The pattern of the back, Fig. 254, is obtained by reproducing

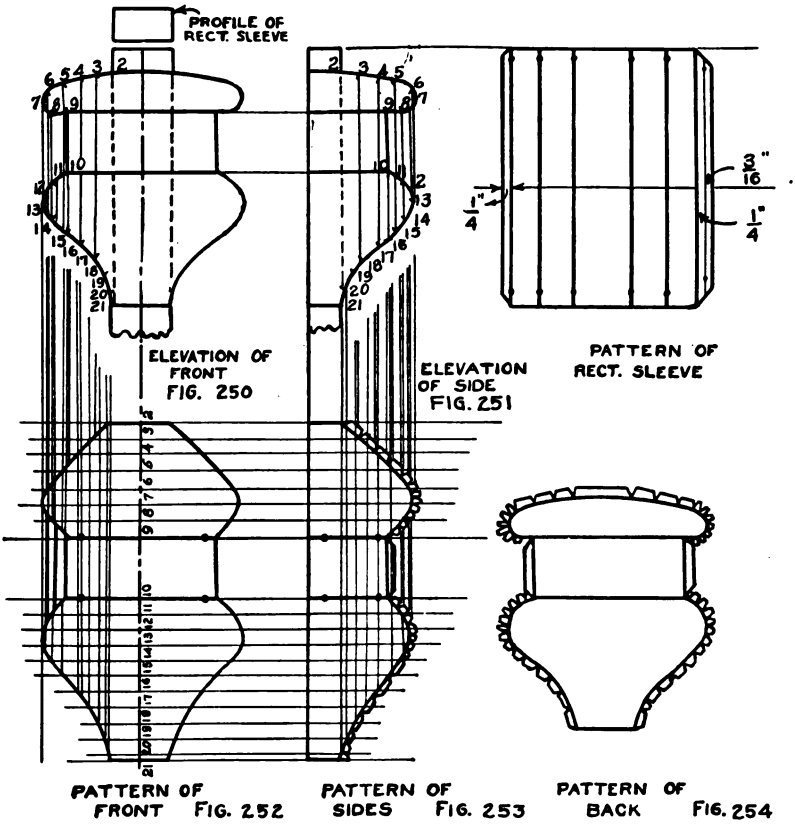

FIGS. 250–254.—Conductor Head.

the outline of the front elevation, Fig. 250, and adding laps, which are notched as shown.

80. Related Mathematics on Conductor Head.—Since all conductor heads are composites of the surfaces of many different solids, it is impracticable to attempt to compute their exact surface area. The most accurate method of obtaining the cost of material entering into their manufacture is to lay out a full size

Digitized by Google

pattern, arrange the several pieces so as to produce a minimum of waste, and compute the area of the rectangle thus obtained.

Problem 42A.—Show how you would arrange the blanks for the conductor head in order to produce as little waste as possible.

Problem 42B.—What is the area in square feet of the metal required as shown by Problem 42A?

Problem 42C.—What would be the weight of the metal if it were 16 oz. copper?

Problem 42D.—Allowing three hours' labor at $1.35, and 30 cents for solder, what would be the selling price of the head if 30 per cent of the cost price were added for profit?

Digitized by Google

Problem 43

FACE MITERS

81. Face Miters.—A face miter may always be distinguished from a return miter by the fact that the miter line can be seen in the elevation; whereas, the miter line of a return miter always appears in the plan.

Figure 255 gives the same profile as was used in Fig. 245. This profile is used again in order to afford the student an opportunity to compare the two types of miters and note wherein the difference lies.

The ogee is divided into small spaces and numbers placed at each point of the entire profile.

Extension lines are carried over to the right from points 1 and 11 to form the outline of one leg of the miter. These lines are then intersected by a miter line drawn at an angle of 45° since the miter itself is a square, or 90° face miter. The other leg of the miter is now drawn and lines added to complete the elevation as shown by Fig. 256.

A line of stretchout, Fig. 257, is next drawn and the distances between points of the profile transferred in their proper sequence, with numbers to correspond. Measuring lines are drawn through each of these points at right angles to the line of stretchout. Starting from point 1 of the profile an extension line is carried to measuring line 1 of the stretchout. In like manner all other points of intersection are located in the stretchout. Any tendency to "short-circuit" this operation should be guarded against by referring back each time to the starting point in the profile. By neglecting to do this, mistakes are apt to occur, which can be detected only after the parts are formed up and the assembling process has begun. The miter cut of the pattern should now be drawn in, and dots placed on the lines that are to be bent in the cornice brake.

As was the case with the square return miter, the pattern can be taken directly from the profile. The main consideration is the proper placing of the profile with reference to the direction in which the extension lines from the profile are to be drawn. A mistake of this nature will result in a face miter when a return miter was intended; or, a return miter when a face miter was desired. Also, as was the case of the return miter, the extension lines can be taken

Digitized by Google

from the profile, only in case the miter is at an angle of 90°. Otherwise an elevation must be drawn, as the miter line will deflect the

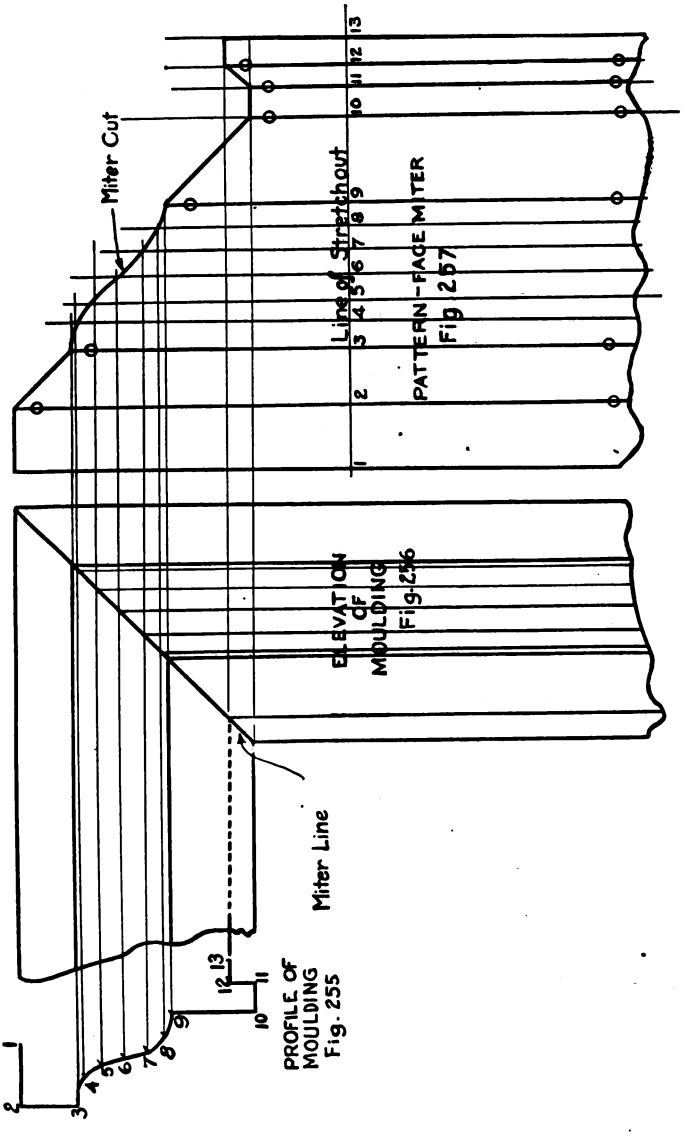

FIGS. 255–257.—Face Miters.

extension lines as they pass through the elevation in a miter other than one of 90°.

Digitized by Google

Problem 44

WINDOW CAP

82. Window Cap.—Figures 258 and 259 show the elevation and profile of a window cap in the form of an angular pediment. It is a combination of two horizontal mouldings having square return miters on their outer ends and two inclined or rake mouldings that miter upon each other at the center line, and with the horizontal mouldings at their lower ends. The triangular space beneath the rake mouldings contains a sunken panel.

This problem presents two new features; namely, a face miter at other than right angles, and a sunken panel. A profile is "drawn in" one of the rake mouldings in order to show the amount of "sink," and the method of joining the panel to the mouldings.

The details for a job of this nature are always furnished by the architect. The exact measurements must be taken at the building, where it is often found that a given set of windows will vary from $\frac{1}{8}$ in. to $\frac{1}{4}$ in. in width. This variation is taken care of by lengthening or shortening the horizontal mouldings. This can be done by the cutter since it does not affect the miter cuts.

The elevation, Fig. 258, must be carefully drawn, care being taken to draw the rake mouldings at their proper angles. The miter lines must also exactly bisect the angle of the miter.

The profile, Fig. 259, is next drawn and the curved line divided into small spaces. Each point and vertex are then numbered. An extension line is now carried from the point of intersection of the miter line and the sunken panel, point *A* of Fig. 258, over into the profile as shown by point *A* of Fig. 259.

From each point in the profile, extension lines are carried over into the elevation, Fig. 258, until they intersect the first miter line. These extension lines are now carried parallel to the outline of the rake moulding until they intersect the second miter line, which is also the vertical center line of the entire elevation.

A line of stretchout, Fig. 260, is now drawn at right angles to the side of the rake moulding. Upon this line the exact spacing of the profile from points 1 to *A* inclusive should be laid down. Then by referring to the profile that is drawn in the right-hand rake moulding, it will be seen that distances 18–*A*, *AB*, and *BC* must be added to the line of stretchout beyond point 18. Extension lines should now be drawn at *right angles to the sides of the rake moulding*

Digitized by Google

from each intersection of both miter lines of the rake moulding. Points of intersection in the stretchout may be determined by following each extension line from its source in the profile to a correspondingly numbered line in the stretchout. The miter cuts of the pattern are drawn by connecting the points of intersection. As in the case of the side patterns for the conductor head,

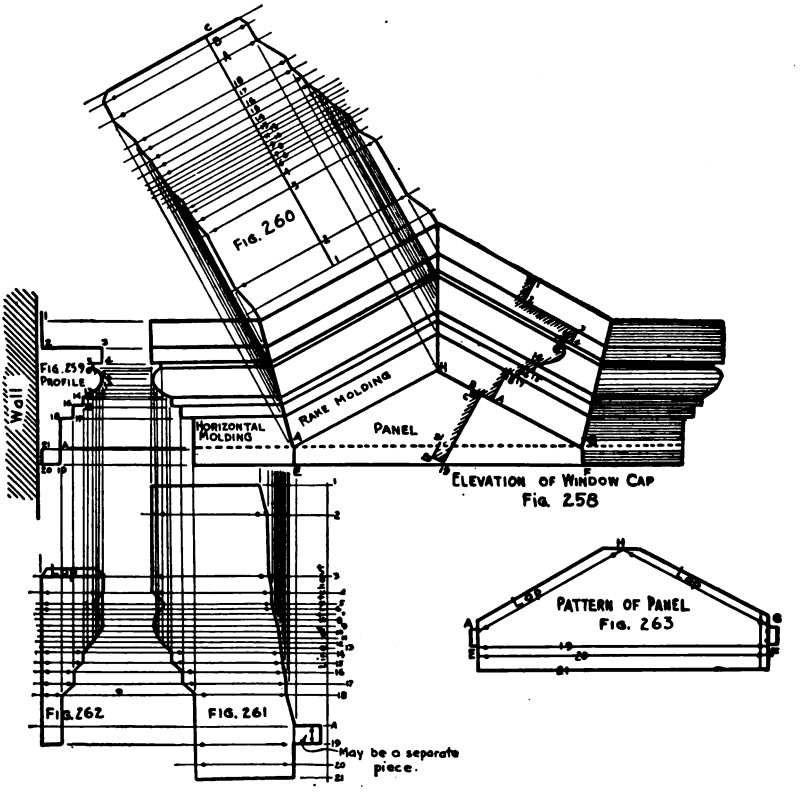

FIGS. 258–263.—Window Cap.

one pattern will suffice for both rake moulds, but they must be formed in pairs for assembling.

Another line of stretchout is now drawn at right angles to the base line of the horizontal moulding as shown in Fig. 261. Upon this line should be laid down the spacing of the entire profile including the point *A*. Measuring lines are drawn through each point at right angles to the line of stretchout.

Digitized by Google

The measuring lines should now be intersected by extension lines dropped from the miter line between the horizontal and rake mouldings, and from each intersection of the profile which appears on the left-hand end of the horizontal moulding (the return miter). Intersections of the stretchout may now be definitely determined by tracing each extension line from its source in the profile to a correspondingly numbered line in the stretchout, Fig. 261. The miter cuts are now drawn. Two blanks from this pattern are needed and they must be formed in pairs.

Using the same set of measuring lines, extension lines are now dropped from each point in the profile, Fig. 259, until they intersect correspondingly numbered lines. Lines connecting these points will give the outline of the pattern for the ends, Fig. 262. A lap is added to the top of the pattern for joining to the "wash" (top surface) of the horizontal moulding. From this pattern two blanks, formed in pairs, must be cut.

The pattern for the panel is obtained by reproducing the surface *A*, *E*, *F*, *G*, *H* of Fig. 258. The edge (line *BC* of profile in Fig. 258) for joining the panel to the rake moulding must be added to four sides of this surface. The spaces between points 19, 20, and 21 of the profile in Fig. 258 must be added to the base of this surface as in Fig. 263. It should be noticed that the space 19–20 of this profile is less than space 19–20 of Fig. 259, because of the sunken panel. From this pattern but one blank is cut, which is formed according to the profile in Fig. 258. The sunken panel leaves small openings along the lines *AE* and *FG* of Fig. 258, which may be closed by allowing a "tab" at line *A*–19 of Fig. 261. However, as this wastes material a small piece of metal may be cut to shape, and inserted after the window cap has been assembled.

The distinction between a rake moulding and a raked or raking moulding should be noted:

A *rake moulding* is simply a moulding that is inclined to the horizontal. It has the same profile as the horizontal moulding to which it is joined.

A *raked* or *raking moulding* is an inclined moulding that joins a horizontal or other moulding that does not lie in the same plane. It does not have the same profile as does the moulding to which it is joined. It takes its name from the fact that its profile must be altered or raked in order to join with the other moulding.

Digitized by Google

CHAPTER XIII

TRIANGULATION OF SCALENE CONES

Prob. No.	Job	Drawing Objective	Mathematical Objective
45	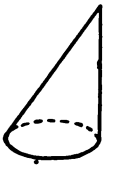 SCALENE CONE	Introducing the principles underlying the study of triangulation.	
46	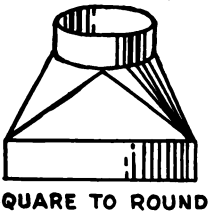 SQUARE TO ROUND TRANSITION	Applying scalene cone to chimney top pattern. One profile divided.	
47	OVAL TO ROUND TRANSITION 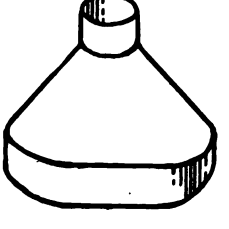	Designing the fitting. Both profiles divided.	Computing equivalent areas. Area of oval.

Objectives of Problems on Triangulation of Scalene Cones.

Digitized by Google

Problem 45

SCALENE CONE

83. The Scalene Cone.—Figure 264 shows the top view of a scalene cone whose base is represented by a circle and whose apex falls in a line perpendicular to the plane of the base at the point 2.

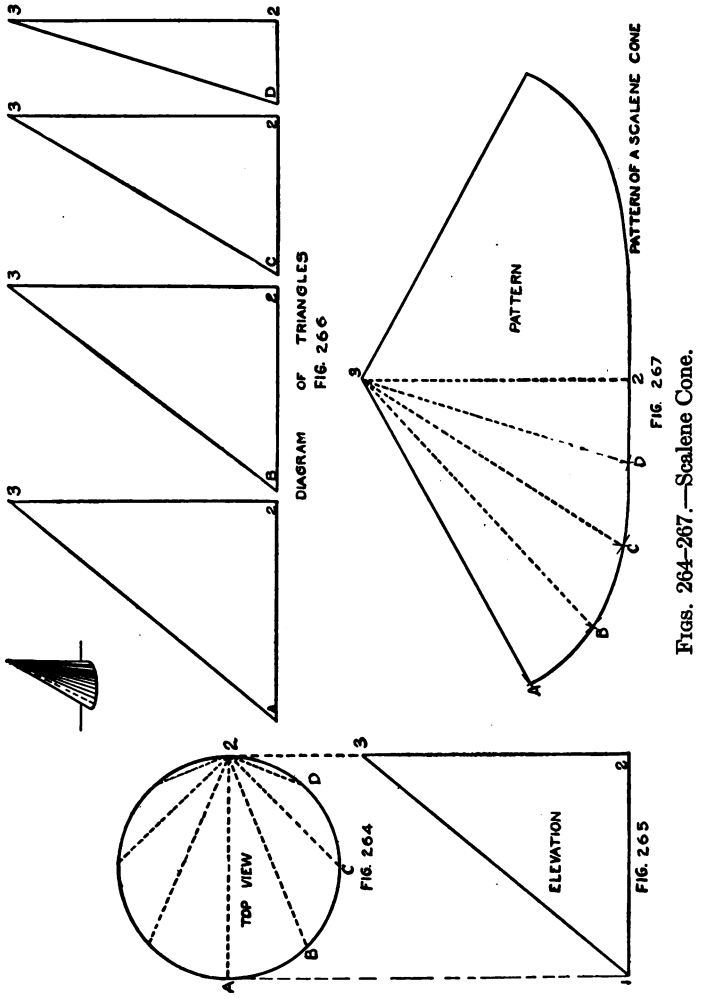

Figs. 264–267.—Scalene Cone.

Figure 265 is an elevation of the cone, showing the apex, point 3, on the perpendicular line drawn from point 2. The line 2–3 is the altitude of the cone.

Digitized by Google

The top view is drawn and the circumference of the circle divided into eight equal parts. Straight lines are then drawn connecting point 2 with points *A*, *B*, *C*, and *D*. These are known as base lines, since they are equal in length to similarly drawn lines on the model; that is, they are true lengths.

Four horizontal lines, Fig. 266, are now drawn equal in length to lines *A*–2, *B*–2, *C*–2, and *D*–2 of Fig. 264. Corresponding letters and numbers are placed at the extremities of these lines. Perpendicular lines are erected at point 2 of each line, equal in length to line 2–3 of Fig. 265. Points *A*–3, *B*–3, *C*–3, and *D*–3 may now be connected by straight lines, thereby forming four right triangles. The hypotenuses of these triangles are elements of the surface of the cone; that is, they are equal in length to lines similarly drawn on the surface of the model. That branch of pattern drafting known as triangulation takes its name from the fact that the surfaces are developed from a series of triangles whose hypotenuses are equal to certain elements—straight lines drawn on the surface of the cone.

A vertical line, Fig. 267, is now drawn equal in length to the altitude, line 2–3, of Fig. 265. With point 3 as a center and radii equal to hypotenuse 3–*D*, 3–*C*, 3–*B*, and 3–*A*, arcs are drawn to the left of line 2–3. Point *D* is located by an arc drawn from point 2 whose radius is equal to distance 2–*D* of Fig. 266. In like manner points *C*, *B*, and *A* are located by arcs drawn from points *D*, *C*, and *B* respectively. All of these intersecting arcs have the same radii, since the base of the cone was equally divided. A straight line 3–*A* and a curved line *A*, *B*, *C*, *D*, 2 completes the half pattern, which may now be copied on the other side of line 2–3 to obtain the full pattern.

It is advisable to make a model by cutting out the triangles of Fig. 266, attaching them to the base lines of Fig. 264, and slipping the envelope, Fig. 267, over this framework.

Digitized by Google

Problem 46

SQUARE TO ROUND TRANSITION

84. Square to Round Transition.—The sheet metal worker is often called upon to make square to round transitions. In heating and ventilation, square and rectangular pipes are changed to round pipes, and ventilators with round shafts are mounted on rectangular bases. Wherever the cross-section of a pipe is changed to another shape the transformation should be gradual in order to avoid excessive friction.

Figure 268 is a pictorial view of a square to round transition. The transition may be considered as being made up of a rectangular prism, having a portion of a scalene cone at each corner, the spaces between these being filled by triangular-faced pieces.

Figure 269 shows one-quarter of the transition removed and the triangles that are to be used in the development of the pattern drawn in their respective positions.

The Plan.—The plan, Fig. 271, is the first view to be drawn. The plan may be divided into four equal parts. It is necessary to treat but one part. The center points of two sides of the square are first determined as shown by points 1 and 3. That part of the circumference between the horizontal and vertical diameters is now divided into four equal parts as shown by points *A*, *B*, *C*, and *D*.

The base lines are now drawn in, but before drawing them the draftsman must determine the order in which he intends to develop the pattern. It will simplify the study of triangulation if a standard method of development is adopted. Every line should be considered as running in but one direction; for instance, the line *AB* should be considered as running from point *A* to point *B* and not from point *B* to point *A*. Furthermore, this line should always be read as *A* to *B*, and not simply *AB*. By pursuing this method the draftsman is enabled to leave his drawing at any time and pick up the "thread" where he left off, upon his return. The letters should be confined to one base and the figures to the other. Thus in Fig. 271, the order would be 1–*A*, 2–*A*, 2–*B*, 2–*C*, 2–*D*, and *D*–3.

The elevation, Fig. 270, may now be drawn, but since the only added information it contains is the altitude of the triangles the experienced draftsman rarely draws this view.

Digitized by Google

The Diagram of Triangles.—A series of short horizontal lines, Fig. 272, are drawn equal in length and numbered to correspond to

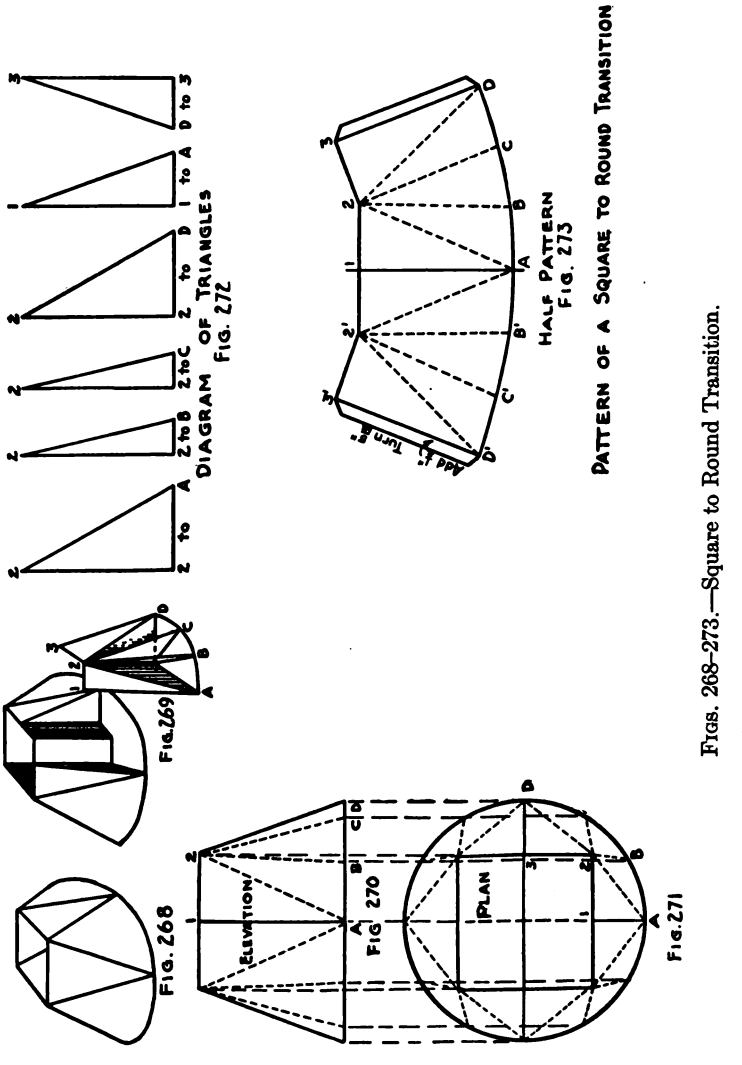

FIGS. 268–273.—Square to Round Transition.

the base lines of Fig. 271. Perpendiculars are erected at points 2 and 3, and the several hypotenuses are drawn in as shown.

The Pattern.—A horizontal straight line is drawn equal in

Digitized by Google

length to line 1–2 of Fig. 271. With point 1 as a center and a radius equal to the hypotenuse of triangle 1–*A*, an arc is drawn below line 1–2. This is intersected by an arc drawn from point 2 with a radius equal to the hypotenuse of triangle 2–*A*. The intersection locates the point *A* on the pattern. With point 2 as a center and a radius equal to the hypotenuse of triangle 2–*B*, an arc is drawn bearing away from point *A*. This arc is intersected by another drawn from point *A*, whose radius is equal to line *AB* of Fig. 271. This intersection is lettered *B*. In like manner, points *C* and *D* are located. Then with point *D* as a center and a radius equal to the hypotenuse of triangle *D*–3, an arc is drawn bearing away from point 2. This arc is intersected by another drawn from point 2, whose radius is equal to line 2–3 of Fig. 271. Straight and curved lines connecting these points give the outline of the quarter pattern. This is now duplicated on the other side of line 1–*A* to obtain the half pattern.

Half-inch locks are added to each side of the pattern, but the workman, in forming the locks, should turn but $\frac{5}{16}$ in. It is advisable to construct a model from the plan and diagram of triangles, in order to aid in the visualization of the project.

Digitized by Google

Problem 47

OVAL TO ROUND TRANSITION

85. Oval to Round Transition.—The oval to round transition is extensively used in hot air furnace heating. In Fig. 275 the oval and the circle have the same center, but often the job demands that the center of the circle be placed to one side of the oval. However, the method of developing the pattern is the same in all cases, as long as the planes of the top and the bottom are parallel.

The Plan (Fig. 275).—The profiles of the upper and lower bases should be drawn in their proper positions with a horizontal center line for each. Since these profiles have the same center, the line AJ divides the figure into two equal parts and, therefore, but one-half need be treated.

Both half-profiles are now divided into equal spaces and each division numbered or lettered as shown. The order of development, as explained in Problem 46, should now be determined.

The Diagram of Triangles (Fig. 276).—Having determined the order in which the base lines are to be taken from Fig. 275, short horizontal lines equal to each base line are drawn. These are shown in Fig. 276, and the order should be carefully studied. Perpendicular lines equal in length to the altitude of the fitting, as shown in Fig. 276, are erected at one end of each of these lines. The hypotenuses of the several triangles are then drawn in.

The Pattern (Fig. 277).—A distance equal to the hypotenuse of triangle AD is set off upon any vertical line. These points are lettered A and 1. With point 1 as a center and a radius equal to the hypotenuse of triangle 1–B, an arc is drawn bearing away from point A. This is intersected by an arc drawn from point A, whose radius is equal to line AB of Fig. 275, thereby locating point B.

With B as a center and a radius equal to the hypotenuse of triangle B–2, an arc is drawn bearing away from point 1. This is intersected by an arc drawn from point 1, whose radius is equal to the line 1–2 of Fig. 275, thereby locating point 2.

In like manner all points of the pattern may be located. Attention is called to the space between letters E and F of Fig. 275. Since this is a straight line it is not divided and, therefore, the space EF is greater than any of the others.

Curved lines passing through the points thus obtained give the

Digitized by Google

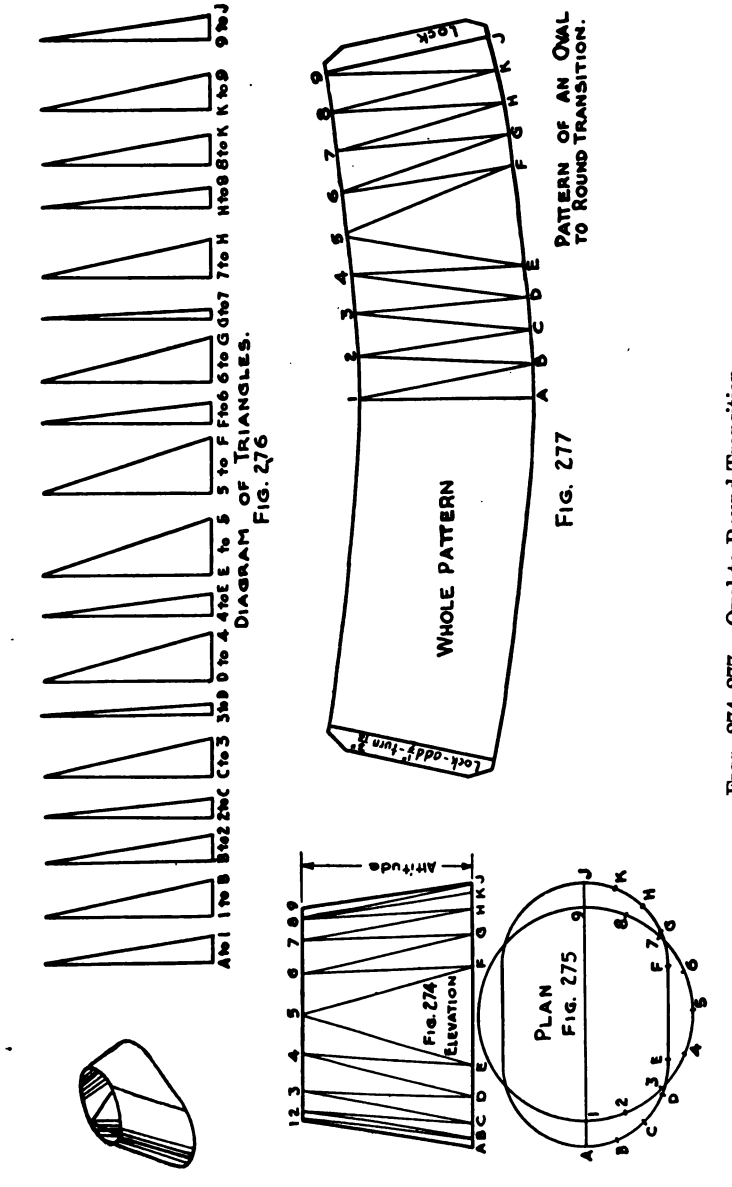

FIGS. 274-277.—Oval to Round Transition.

Digitized by Google

outline of one-half of the pattern. This is copied on the other side of line 1–*A* in order to produce the whole pattern.

86. Related Mathematics on Oval to Round Transition.—*Equivalent Areas.*—When two dissimilar profiles contain the same number of square inches of surface area, they are said to have equivalent areas. When any change of profile occurs in a system of piping, the areas must be equivalent.

Area of an Oval.—An oval is a rectangle having semicircular ends; therefore, its area is equal to the area of some rectangle, plus the area of some circle.

In any oval the diameter of this circle is equal to the width of the oval. The rectangle has for its dimensions the width of the oval, and the difference between the width and the length of the oval.

Example.—What is the area in square inches of an oval profile 4″ wide and 14″ long?

Diameter of circle = 4″ Dimension of rectangle 4″ × (14″ − 4″)

Area of circle = $4^2 \times .7854$

$$\begin{array}{r} .7854 \\ 16 \\ \hline 47124 \\ 7854 \\ \hline 12.5664 \text{ sq. in.} \end{array}$$

Area of rectangle = $4 \times 10 = 40$ sq. in.

Combined areas $= 40 + 12.57 = 52.57$ sq. in. *Ans.*

Problem 47A.—What are the areas of the following sizes of oval profiles?

(*a*) $3\frac{1}{2}'' \times 15''$
(*b*) $4\frac{1}{2}'' \times 14\frac{1}{2}''$
(*c*) $3'' \times 11''$
(*d*) $3\frac{3}{4}'' \times 15\frac{1}{2}''$
(*e*) $6'' \times 13\frac{3}{4}''$

Problem 47B.—An 8″ round pipe is to be "ovaled down" to a width of $3\frac{5}{8}''$. What must be the length of the oval?

(Hint: Subtract the area of a $3\frac{5}{8}''$ circle from the area of the 8″ circle and divide the remainder by the width of the oval.)

Digitized by Google

Problem 47C.—A furnace man finds the following sizes of oval risers have been installed in the partitions: One $3\frac{1}{2}'' \times 13\frac{5}{8}''$; one $6'' \times 9\frac{1}{4}''$; one $3\frac{1}{2}'' \times 15\frac{1}{8}''$; and one $3\frac{1}{2}'' \times 14\frac{1}{4}''$. What are the equivalent round pipe areas for cellar mains to supply each of these risers? What is the nearest diameters of the cellar mains if the diameters increase by half inches?

Digitized by Google

CHAPTER XIV

TRIANGULATION OF TRANSITION PIECES

Prob. No.	JOB	DRAWING OBJECTIVE	MATHEMATICAL OBJECTIVE
48	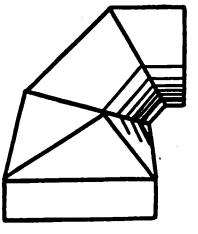 SQUARE TO ROUND	*Introducing the inclined plane. Development of section on cutting plane.*	
49	OVAL TO ROUND	*Designing the fitting Oval to Round Elbow. Varying altitudes.*	

Objectives of Problems on Triangulation of Transition Pieces.

Digitized by Google

Problem 48

TRANSITION BETWEEN A SQUARE PIPE AND THE SECOND PIECE OF AN ELBOW

87. Transition between a Square Pipe and the Second Piece of an Elbow.—In order to save height the sheet metal draftsman is often compelled to design a transition between a square or a rectangular pipe and the second piece of a round pipe elbow. In other words, the transition takes the place of the first piece of the elbow.

In order to accomplish this purpose it is necessary to incline the plane of the top to that of the base of the transition.

Figure 278 shows the elevation of the small end of a two-piece 45° elbow with the transition attached in its proper position. In drawing this view care must be taken to get the true miter line according to the rules laid down in Chapter III.

Directly above the small end of the elbow a half-profile is drawn and divided into eight equal parts. The divisions are numbered as shown, and extension lines carried down through the elevation until they meet the miter line. Numbers are placed on the miter line to correspond to the numbering of the half-profile.

As has already been pointed out in previous chapters, whenever a cylinder is cut by an inclined plane, the section on that cutting plane is an ellipse. In order to obtain the proper spacing on the pattern a true section on the miter line must be developed in the following manner. Line 1–9 of Fig. 279 is an extension of line 1–9 of the half-profile. Upon this line should be placed the exact spacing of the miter line, and perpendiculars erected at each point. These perpendiculars are intersected by extension lines brought over from correspondingly numbered points in the half-profile. A curved line traced through the intersections thus obtained gives a true section on line 1–9 (miter line) of the elevation.

From each intersection of the miter line of Fig. 278 extension lines are dropped vertically for an indefinite distance. The profile of the square base of the transition is next drawn in its proper position as shown by *A*, *B*, *C*, *D* of Fig. 280.

The horizontal center line, *EF*, locates the center of the circle which is also the profile of the round pipe. The extension lines from the miter line of Fig. 278 should divide this circle into equal

Digitized by Google

spaces. If they fail to do so, an error in drawing has been made which should be corrected before proceeding further.

The order of development must now be decided upon. The

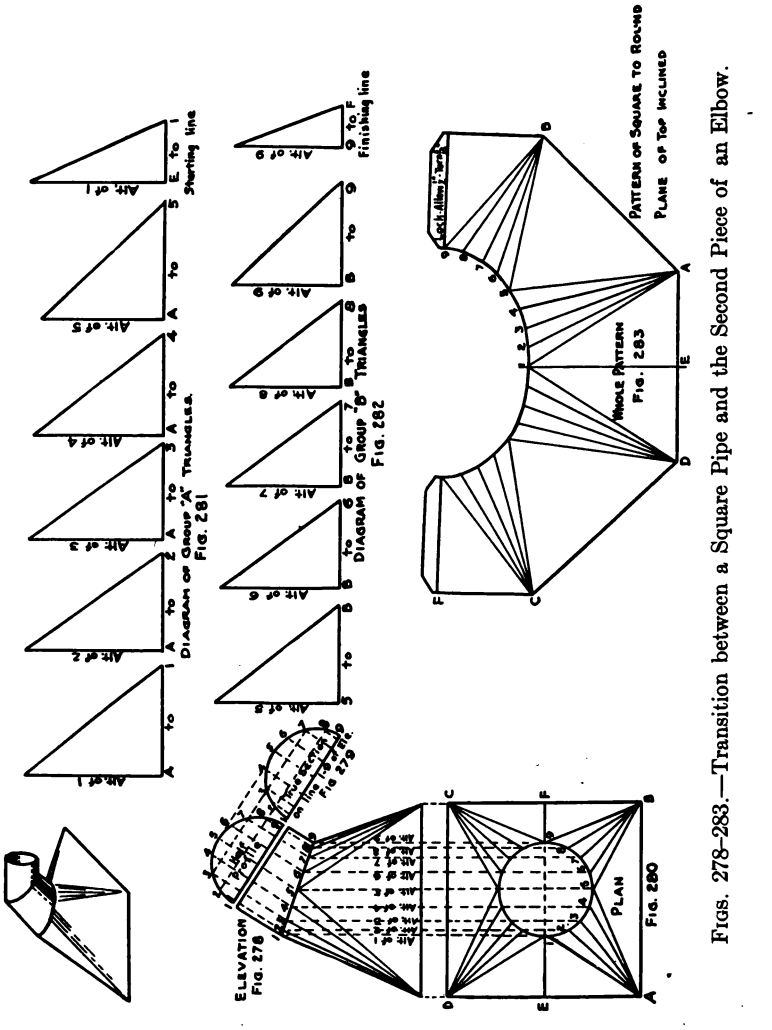

FIGS. 278–283.—Transition between a Square Pipe and the Second Piece of an Elbow.

triangles naturally divide into two groups, Group *A* being those triangles having their base lines starting from point *A*, and Group *B* starting from point *B*. Besides these triangles there is a start-

Digitized by Google

ing line which is the hypotenuse of a right triangle upon the base line *E*–1 and a finishing line upon base line 9–*F*.

The diagrams of triangles are now constructed by drawing short horizontal lines equal in length to their respective base lines with corresponding numbers and letters. Perpendiculars are erected at one end of each of these horizontals. Since the plane of the top of the transition is inclined, the altitudes of these triangles vary. This variation is shown in Fig. 278 where the altitudes of various triangles are plainly marked. In determining the altitude of any point it should be remembered that the altitude is always the perpendicular distance between the plane of the base and the point in question. These altitudes should be placed on the proper perpendiculars, and in this connection it may be noted that the altitude always changes with the number; that is, wherever the number 2 occurs the altitude of 2 as shown in Fig. 278 must be used. The hypotenuses of the several triangles are now drawn.

The pattern development is started by drawing a horizontal line equal in length to the side *DA* of Fig. 280. Upon this line the center point *E* should be placed. A perpendicular line is erected at point *E* equal in length to the hypotenuse of triangle *E*–1. This establishes point 1, and the distance from point *A* to point 1 should correspond exactly in length to the hypotenuse of triangle *A*–1.

Since the center line *EF* of Fig. 280 divides the figure into two equal parts the pattern can be developed on each side of line *E*–1 of Fig. 283 simultaneously. The experienced draftsman always takes advantage of this fact when a whole pattern is to be developed. The line *D*–1 in Fig. 283 is next drawn, and when a distance is laid off from point *A* a like distance is also laid off from point *D*.

With point *A* as a center and a radius equal to the hypotenuse of triangle *A*–2 an arc is drawn bearing away from point 1. This is intersected by an arc drawn from point 1 with a radius equal to the distance 1–2 of Fig. 279. In like manner points 3, 4, and 5 are established, but it must be remembered that the distances between figures must be taken each time from the true section, Fig. 279. With point 5 as a center and a radius equal to the hypotenuse of triangle 5–*B*, an arc is drawn bearing away from point *A*. This is intersected by an arc drawn from point *A* with a radius equal to side *A*–*B* of Fig. 280. This establishes point *B*.

From *B* as a center and with the several hypotenuses of Group

Digitized by Google

B triangles as radii, points 6, 7, 8, and 9 are established in the same manner as were points 2, 3, 4, and 5.

With point 9 as a center and a radius equal to the hypotenuse of triangle 9 to *F*, an arc is drawn bearing away from point *B*. This is intersected by an arc drawn from point *B* with a radius equal to line *BF* of Fig. 280. This establishes point *F*.

A curved line is now drawn through points 1 to 9. Straight lines are drawn connecting points *F*, *B*, and *A*. If both sides of the pattern have been worked simultaneously, the whole pattern has been developed and locks may now be added as shown.

The straight lines representing the square base are treated according to the type of joint adopted for the system of piping, of which this "fitting" is a part.

Digitized by Google

Problem 49

TRANSITION BETWEEN AN OVAL PIPE AND THE SECOND PIECE OF AN ELBOW

88. Transition between an Oval Pipe and the Second Piece of an Elbow.—Figure 284 is constructed by first drawing an elevation of the required elbow according to the directions given in Chapter III. The first piece of the elbow is then erased and the elevation of the transition added. A half-profile is then drawn adjacent to the small end of the elbow and divided into eight equal parts. These divisions are numbered as shown, and extension lines are carried through the elevation until they meet the first miter line, where corresponding numbers are placed at each intersection.

From the intersections of the miter line vertical extension lines are dropped. These extension lines are crossed by the horizontal center line *AK* as shown in Fig. 286. About this center line the plan, Fig. 286, is now drawn. The vertical extension lines divide the circumference of the circle into equal parts. One-half of the oval profile may now be equally divided, although the straight line *EF* may be considered as one space.

A true section on the miter line should now be developed as shown by Fig. 285, in the following manner. Extension lines are carried horizontally from points 1 and 9 of Fig. 284, and a new line 1–9 is drawn parallel to line 1–9 of Fig. 284. The exact spacings of the miter line are transferred to this line, and perpendiculars are erected at each point with numbers to correspond. Upon each of these perpendiculars and on each side of the line 1–9, a distance is laid off equal to the distance from a correspondingly numbered point in the half-profile to the center line 1–9 of the half-profile. A curved line traced through the intersections thus obtained is a true section on miter line 1–9 of Fig. 284.

Before the base lines for the triangles can be drawn in Fig. 286, the order of triangulation must be determined. In a transition of this kind the elements of the surface must alternate between the upper and lower bases in order to have sufficient data with which to develop the pattern. A standard order of triangulation is given below, together with the altitude for each triangle.

The base lines may now be drawn in Fig. 287 according to this order.

Digitized by Google

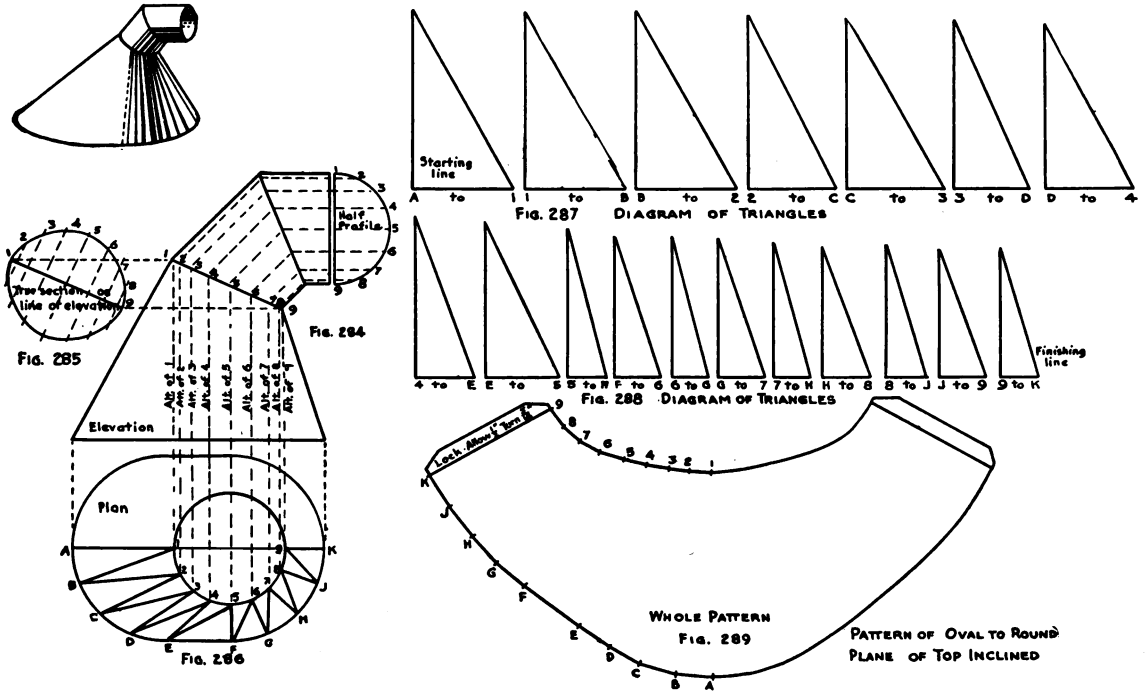

Figs. 284–289.—Transition between an Oval Pipe and the Second Piece of an Elbow.

Digitized by Google

ORDER OF TRIANGULATION FOR FIG. 286

Triangles.	Altitudes.	Triangles.	Altitudes.	Triangles.	Altitudes.
A to 1	1	*D* to 4	4	*G* to 7	7
1 to *B*	1	4 to *E*	4	7 to *H*	7
B to 2	2	*E* to 5	5	*H* to 8	8
2 to *C*	2	5 to *F*	5	8 to *J*	8
C to 3	3	*F* to 6	6	*J* to 9	9
3 to *D*	3	6 to *G*	6	9 to *K*	9

The diagrams of triangles, Figs. 287 and 288, are now constructed by drawing short horizontal lines equal to the base lines of Fig. 286 with letters and numbers to correspond. Upon perpendiculars erected at one end of each of these lines the proper altitude is placed. The true lengths of the altitudes are plainly marked in Fig. 284.

The pattern development is started by drawing a straight line and setting off upon it a distance equal to the hypotenuse of triangle *A* to 1. Next in order comes triangle 1–*B*, so with point 1, Fig. 289, as a center and with a radius equal to the hypotenuse of triangle 1–*B*, an arc is drawn bearing away from point *A*. This is intersected at *B* by an arc drawn from point *A*, with a radius equal to line *AB* of Fig. 286.

With *B* as a center and a radius equal to the hypotenuse of triangle *B*–2, an arc is drawn bearing away from point 1. This is intersected by an arc drawn from point 1, with a radius equal to the distance 1–2 of Fig. 285, thereby establishing point 2 of the pattern. In this manner the entire half pattern is developed by following the order of triangulation, taking the spaces between the figures from Fig. 285, and the spaces between the letters from Fig. 286. Should the draftsman require a whole pattern, he would work both ways from the center line *A*–1, as the development progressed.

Digitized by Google

CHAPTER XV

DEVELOPMENTS BY SECTIONS

Prob. No.	JOB	DRAWING OBJECTIVE	MATHEMATICAL OBJECTIVE
50	FRUSTUM OF A CONE 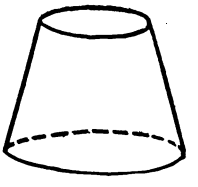	*Introducing the principles underlying the study of development by sections.*	
51		*Designing the fitting. Applying the principles of development by sections.*	
52	SQUARE TO ROUND SPLIT HEADER 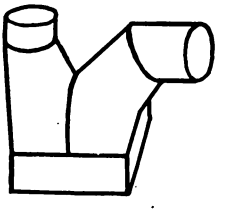	*Developing a true section on the vertical miter line.*	*Proportioning the pipes. Percentage of air delivered.*

Objectives of Problems on Developments by Sections.

Digitized by Google

Problem 50

THE FRUSTUM OF A SCALENE CONE

89. The Frustum of a Scalene Cone.—Triangulation is the universal tool of the Sheet Metal Draftsman. Any surface capable of being developed can be developed by this method. However, in the case of the cone and the cylinder less laborious methods are available which are just as accurate. In many problems that cannot be classed as parallel line or tapering form developments, there is a shorter method known as Development by Sections.

This method is generally employed in problems where solids can be cut into two equal parts by the cutting planes. Figure 290 shows a frustum of a scalene cone cut by a vertical plane in such a manner as to divide it into two equal parts.

Figure 291 shows one of these halves placed so that the cutting plane assumes a horizontal position. If the semicircular ends (profiles) were divided into four equal parts, and perpendiculars dropped from each of these points to the base lines, a model cut along these lines would show the sections as pictured in Fig. 291. It is evident that lines 1–*A* and 5–*E* are true length lines, while *C*–4, 4–*D*, etc., are upper bases of trapezoids and must be developed. After the pattern has been developed, a cardboard model of Fig. 291 made from Fig. 292 and the diagram of sections, Fig. 293, should be constructed to aid in the visualization of future problems.

Figure 292 is a plan or top view of the object with half-profiles attached to each end. These half-profiles are divided into equal parts and extension lines carried to lines 1–5 and *AE* as shown. The divisions are then numbered and lettered. Before the base lines of the sections can be drawn in, the order of sections must be determined. The standard adopted for triangulation can still be adhered to and the order would read *A*–2, 2–*B*, *B*–3, 3–*C*, *C*–4, 4–*D*, and *D*–5. Since lines 1–*A* and 5–*E* are true lengths they need not be mentioned in the order. Having determined the proper order, the base lines on the plan are now drawn in as shown in Fig. 292.

The diagram of sections, Fig. 293, is now constructed by drawing short horizontal lines equal in length to the several base lines of Fig. 292 and with numbers and letters that correspond to the order adopted. Perpendicular lines are erected at each end of

Digitized by Google

these lines. Upon these perpendiculars are set off the lengths of the correspondingly numbered extension lines in the half-profiles. Attention is called to the fact that points 1 and 5 have no altitudes, since they fall on the horizontal plane upon which the entire figure

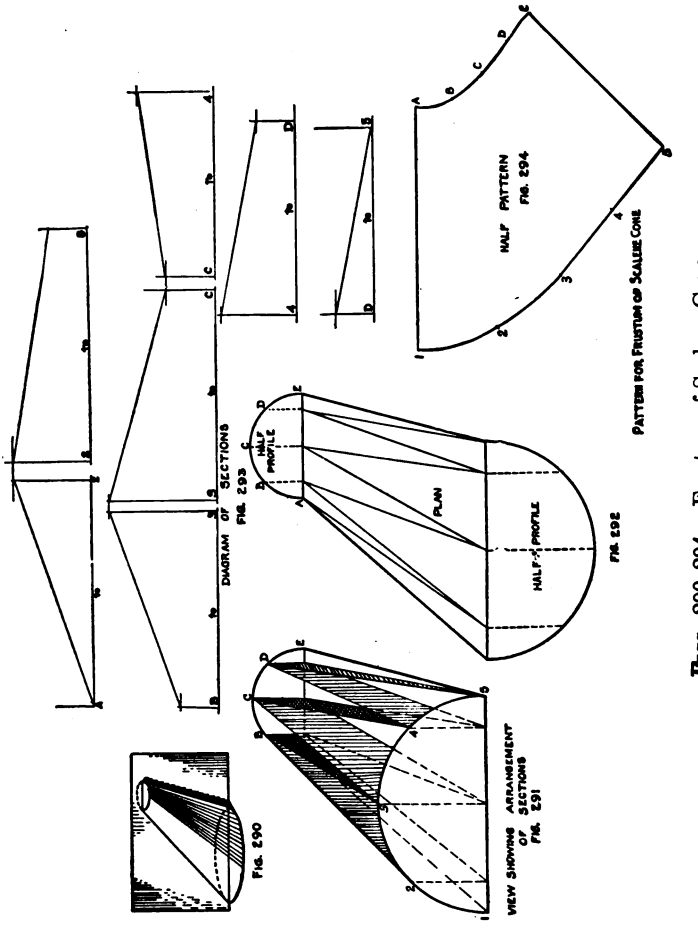

FIGS. 290–294.—Frustum of Scalene Cone

rests. Straight lines connecting the points established upon these perpendiculars are the true lengths from which the pattern is developed.

The pattern is started by drawing a horizontal line such as line 1–*A* of Fig. 294. With *A* as a center and a radius equal to the

Digitized by Google

hypotenuse of section *A* to 2, an arc is drawn bearing away from point 1. This is intersected by an arc drawn from point 1, with a radius equal to the distance 1–2 of the profile. This establishes point 2. With point 2 as a center and a radius equal to the upper base of section 2–*B*, an arc is drawn bearing away from point *A*. This is intersected at *B* by an arc drawn from point *A*, with a radius equal to distance *AB* of the profile. In this manner all the points of the pattern are located in the order previously adopted. Curved lines passing through these points give the half pattern for the entire frustum.

Digitized by Google

Problem 51

CENTER OFFSET BOOT

90. Center Offset Boot.—The pictorial drawing shows the conditions under which a center offset boot is used. The oval wall stack or riser descending from the upper stories generally comes in the center of the stringer. Enough of the stringer is cut away at an angle of 45° to permit the boot to be connected.

As in the case of the scalene cone, this fitting can be cut by a vertical plane so as to form two equal parts. Figure 295 is a plan view of one of these parts. In drawing this view, care must be taken to get the miter lines at the correct angle for a two-piece 45° elbow.

The half-profiles are then drawn in their relative positions and divided into equal parts. It has been observed that in treating oval profiles the straight sides of the oval are never divided. The divisions of the curved portions are numbered and lettered and extension lines carried from each division to the miter lines.

From this view the pattern of the round end and also the oval end of the fitting can be developed according to the rules given in Chapter III.

The center or transition piece of the fitting is developed by means of sections. Figure 296 shows this transition moved to one side in order to avoid a confusion of lines. The intersections of both miter lines are also transferred. Perpendiculars are erected at each intersection and the distances from points *B*, *C*, and *D*, to the center line of the half-profile, Fig. 295, set off on corresponding lines at one end of Fig. 296, and distances from points 2, 3, 4, 5, and 6 to the center line of the half-profile set off on corresponding perpendiculars at the other end of Fig. 296. Curved lines traced through these points give the true sections on the miter lines.

The diagram of sections, Fig. 299, is now constructed by drawing horizontal lines equal in length to the base lines in Fig. 296. Perpendiculars are erected at each end of these lines and lettered and numbered to correspond to the base lines. Upon these perpendiculars are set off distances equal to the length of correspondingly numbered and lettered lines in the true sections of Fig. 296. The lengths of straight lines connecting these points are the true

Digitized by Google

lengths of the lines needed to develop the pattern. The section A to 2 has for its base line the true length line A to 1 of Fig. 296; therefore, both base and hypotenuse of this section are used in the development of the pattern. This is also true of section E to 7.

The pattern, Fig. 300, is started by drawing a vertical line

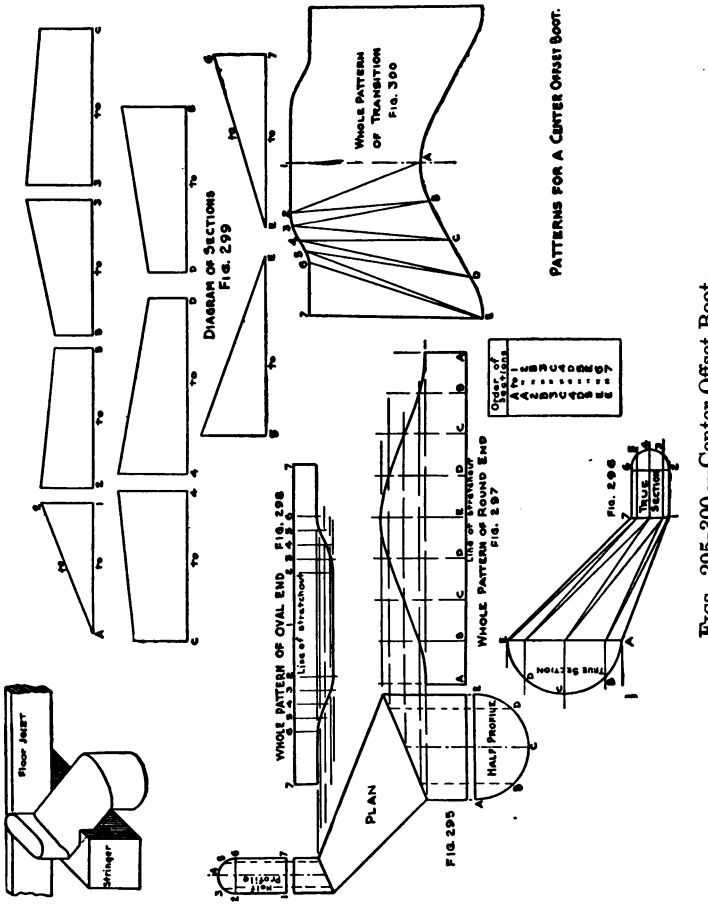

Figs. 295–300.—Center Offset Boot.

equal in length to line A–1 of Fig. 296. With point A as a center and a radius equal to the hypotenuse of section A to 2, an arc is drawn bearing away from point 1. This is intersected by an arc drawn from point 1 with a radius equal to line 1–2 of the true section, Fig. 296. This establishes point 2.

Digitized by Google

With point 2 as a center and a radius equal to the upper base of section 2 to B, an arc is drawn bearing away from point A. This is intersected by an arc drawn from point A with a radius equal to distance AB of the true section, Fig. 296, thereby establishing point B. In this manner all of the points of the pattern are fixed and the curved and straight lines of the pattern drawn in.

Care should be observed with regard to these items:

(*a*) The spacing between the points of the pattern must be taken from corresponding spaces in the true sections.

(*b*) Distances 1–2 and 7–6 are greater than any of the other spaces and must be connected by straight lines.

(*c*) A chisel point must be used in the compass to assure fine lines without which the necessary accuracy cannot be attained. The whole pattern may be produced by copying on the other side of line A–1 the half which has already been drawn.

The pattern may be checked for accuracy by ascertaining whether or not the angle E–7–6 is a right angle. If this angle is of more or less than 90°, the pattern is incorrect. In this connection it should be observed that a slight error in any measurement will throw the whole pattern "out of true."

Digitized by Google

Problem 52

SQUARE TO ROUND SPLIT HEADER

91. Square to Round Split Header.—This type of fitting is often used where a fan with a rectangular outlet must supply two round pipes running in different directions.

This problem presents a case wherein development both by triangulation and by sections may be employed in order to obtain the pattern.

The pattern is in reality two square to round transitions mitering upon each other. Where the two transitions come together a miter line is produced. A true section on this miter line must be developed. The practice of assuming a section, common to some drafting rooms, results in a more or less distorted fitting, according to the experience the draftsman has had in designing such fittings. The workman in forming and assembling the fitting has difficulty in that he must compel the assembly to take an unnatural shape.

The plan, Fig. 301, is first drawn according to the dimensions taken at the job. The profiles are then divided into the same number of equal spaces. After the order of triangulation has been determined, base lines are carried to the corners M and N of the rectangle.

The elevation is drawn in its proper location by means of extension lines carried from the plan. The miter line is drawn in both plan and elevation and should pass through the intersections of the base lines, Fig. 301, at points A, B, C, D, and E; it should also pass through the elevation of the elements, Fig. 302, at points F, G, and H.

A true section on this miter line should now be developed by drawing a horizontal line equal in length to twice the distance AE of Fig. 301. The center point of this line, Fig. 303, should be lettered A, and a perpendicular center line erected. Upon each side of this center, points B, C, D, and E should be located exactly as they appear on the miter line of Fig. 301. Perpendiculars are now erected at each of these points. Point B in Fig. 301 falls on line N–1, and point H falls on line N–1 of Fig. 302; therefore, the perpendicular height of point H from the base line of Fig. 302 should be set off on perpendicular B of Fig. 303. For the same

Digitized by Google

reasons point *G* should be located on perpendicular *C* and point *F* on perpendicular *D*. A curved line traced through these points gives a true section on the miter line.

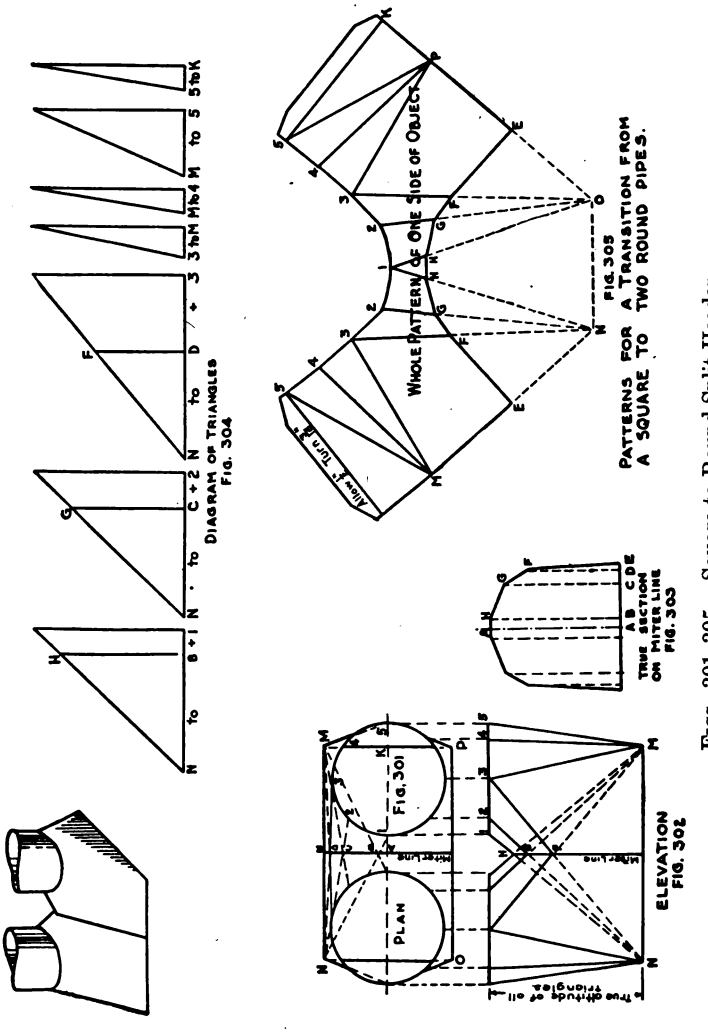

FIGS. 301–305.—Square to Round Split Header.

Because of the intersections of the miter line it will now be necessary to revise the order of triangulation originally adopted when the fitting was considered as two separate square to rounds. The original and revised orders are as follows:

Digitized by Google

Original Order.	Revised Order.
N to 1	*N* to *B* and 1
N to 2	*N* to *C* and 2
N to 3	*N* to *D* and 3
3 to *M*	3 to *M*
M to 4	*M* to 4
M to 5	*M* to 5
5 to *K*	5 to *K*

As will readily be seen the revision is based on the fact that lines *N*–1, *N*–2, and *N*–3 of Fig. 301 cross the miter line at points *B*, *C*, and *D*.

The diagram of triangles, Fig. 304, is now constructed by drawing horizontal lines equal in length to the base lines in Fig. 301. Perpendicular lines are erected at each end of these lines and also at points *B*, *C*, and *D*. Since both the upper and the lower planes of the fitting are parallel there will be but one altitude to the triangles. This altitude is shown in Fig. 302 and should be placed on perpendiculars 1, 2, 3, *M*, 4, 5, and *K* of Fig. 304. The hypotenuses of these triangles may now be drawn and points *H*, *G*, and *F* located by the intersection of perpendiculars *B*, *C*, and *D* with the respective hypotenuses.

The pattern, Fig. 305, is started with a horizontal line equal to line *N*–*O* of Fig. 301. With *N* and *O* as centers and a radius equal to the hypotenuse of triangle *N* to 1, intersecting arcs are drawn above the line, thereby locating point 1. Since both sides of the fitting are equal the pattern may be developed from points *N* and *O* simultaneously. The remainder of the pattern is developed exactly as was the square to round transition of Chapter XIII.

After the entire pattern has been developed the miter cut is developed as follows: Point *E* is located on line *MN* of Fig. 305 exactly as it appears on line *MN* of Fig. 301. The hypotenuse of triangle *N* to *D* is placed on line *N*–3 of Fig. 305, thereby locating point *F*. Placing the hypotenuse of triangle *N* to *C* on line *N*–2 of Fig. 305 locates point *G*, and the hypotenuse of triangle *N* to *B* placed on line *N*–1 locates point *H*.

The miter cut is drawn with straight lines between points *E* and *F* and curved lines connecting points *F*, *G*, and *H* of Fig. 305. This completes the pattern except for locks and riveting laps.

Digitized by Google

In case the round pipes are of unequal diameter the order of triangulation is altered somewhat, but the general method of procedure remains the same. The true section on the miter line is developed by considering the fitting as a transition between the round pipe of larger diameter and the whole of the rectangular base. This section is used for the development of both pieces and the order would read:

Order.		Proper Altitudes.	Spaces obtained from.
Triangles	*K* to 5	True altitude of all triangles as shown in Fig. 301	Circular profile in Fig. 301
	5 to *M*	True altitude of all triangles as shown in Fig. 301	Base of rectangle in Fig. 301
	M to 4	True altitude of all triangles as shown in Fig. 302	Circular profile in Fig. 301
	M to 3	True altitude of all triangles as shown in Fig. 302	Circular profile in Fig. 301
	3 to *E*	True altitude of all triangles as shown in Fig. 302	Base of rectangle in Fig. 301
Sections	3 to *D*	True altitude and alt. of *F*, Fig. 303	*E* to *F* in true section, Fig. 303
	D to 2	True altitude and alt. of *F*, Fig. 303	3 to 2 of circular profile, Fig. 301
	2 to *G*	True altitude and alt. of *G*, Fig. 303	*F* to *G* in true section, Fig. 303
	G to 1	True altitude and alt. of *G*, Fig. 303	2 to 1 in circular profile, Fig. 301
	1 to *B*	True altitude and alt. of *H*, Fig. 303	*G* to *H* in true section, Fig. 303
	1 to *A*	True altitude and alt. of *H*, Fig. 303	*H* to *A* in true section, Fig. 303

It is required that the pattern be redeveloped according to the above order and the results compared with the first development.

92. Related Mathematics on Split Headers.—The question as to how large the branch pipes can or should be made often arises in fan or blower design.

The following factors enter into the consideration of such questions:

(*a*) What percentage of the total volume available must be delivered in a given direction?

Digitized by Google

(*b*) How many and what kinds of machines are to be served by the branch pipes?

(*c*) Losses caused by friction, and the effects upon static and velocity pressures caused by changes in cross-sectional area of the duct.

Item (*c*) is a matter that largely concerns the engineer although the sheet metal worker would do well to have some understanding of these things.

Items (*a*) and (*b*), however, are matters of common arithmetic and the following problems are based on them.

Problem 52A.—The fan outlet measures $19'' \times 35\frac{1}{2}''$. One branch of a split header is equal in area to 69 per cent of the area of the outlet. If both branch pipes are round, what are their diameters?

Problem 52B.—A 20″ pipe carries 75 per cent of the air from a split header. What is the diameter of the other round pipe?

Problem 52C.—A split header has one 15″ and one 18″ branch. What will be the dimensions of the rectangular opening 19″ wide that will accommodate these two branches?

Problem 52D.—On one side of a fan the machines to be served require four 6″, three 4″, and two 3″ pipes, while those on the other side require six 8″, three 6″, and two 4″ pipes. What will be the area of the branch pipes that are needed to serve these machines? (Hint: Loss of head not considered.)

Digitized by Google

CHAPTER XVI

DEVELOPED AND EXTENDED SECTIONS

Prob. No.	JOB	DRAWING OBJECTIVE	MATHEMATICAL OBJECTIVE
53	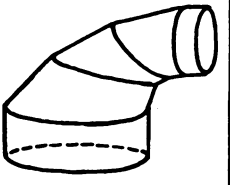 OVAL TO ROUND ELBOW	*Designing fitting. Developing sections on various miter lines.*	
54	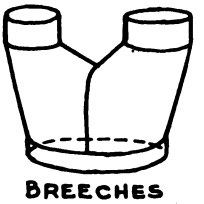 BREECHES	*Design of fittings*	
55		*Extended sections.*	

Objectives of Problems on Developed and Extended Sections.

Digitized by Google

Problem 53

OVAL TO ROUND ELBOW

93. Oval to Round Elbow.—Figure 306 is an elevation of an elbow whose first piece is that of a five-piece round pipe elbow, whose last piece is that of a five-piece oval elbow, and whose intermediate pieces are transitions which gradually convert the round pipe to the oval pipe.

This elevation is constructed by first drawing an angle (angle *AJF*) equal to the required angle of the elbow. The throat radius is then laid off on the base line and the arc of the throat drawn in. This arc is then divided and the miter lines of the elbow are drawn as though the elbow were a regular round pipe fitting such as described in Chapter III. Lines *AB*, *GH*, *ON*, and *FE* are drawn at right angles to the lines *AG* and *OF*, thereby completing the elevation of the first and last pieces. The throats of the second, third, and fourth pieces are drawn tangent to the arc as described in Chapter III.

The length of miter lines *CK* and *DM* are now determined in order to complete the outline of the back. Since the reduction must be gradual, an equal amount must be subtracted from each succeeding miter line. A short and convenient method of finding these lengths is shown in Fig. 313. Four parallel lines are drawn and the lengths of lines *BH* and *EN* placed upon them so that point *E* is directly under point *B*. The difference in length between these two lines is divided into three equal parts and perpendiculars dropped from each of these points to the other parallel lines, thereby establishing the lengths of miter lines *CK* and *DM*.

These lengths are now placed on the proper miter lines in Fig. 306, and the outline of the back of the elbow is completed, by connecting points *B*, *C*, *D*, and *E* with straight lines.

Each miter line as it passes through the elevation is divided into two equal parts, thus locating center points *P*, *R*, *S*, and *T*. The center line of the elevation may then be drawn by connecting these points.

The oval end of the elbow has two flat surfaces while the round end has none. Consequently, these flat surfaces must gradually diminish in width until they disappear upon reaching the round end of the elbow.

Digitized by Google

In order to develop the patterns it is necessary to know the exact widths of these flat surfaces at each cutting plane, and in order to gain this information stretchouts must be made as shown by Figs. 307, 308, and 309.

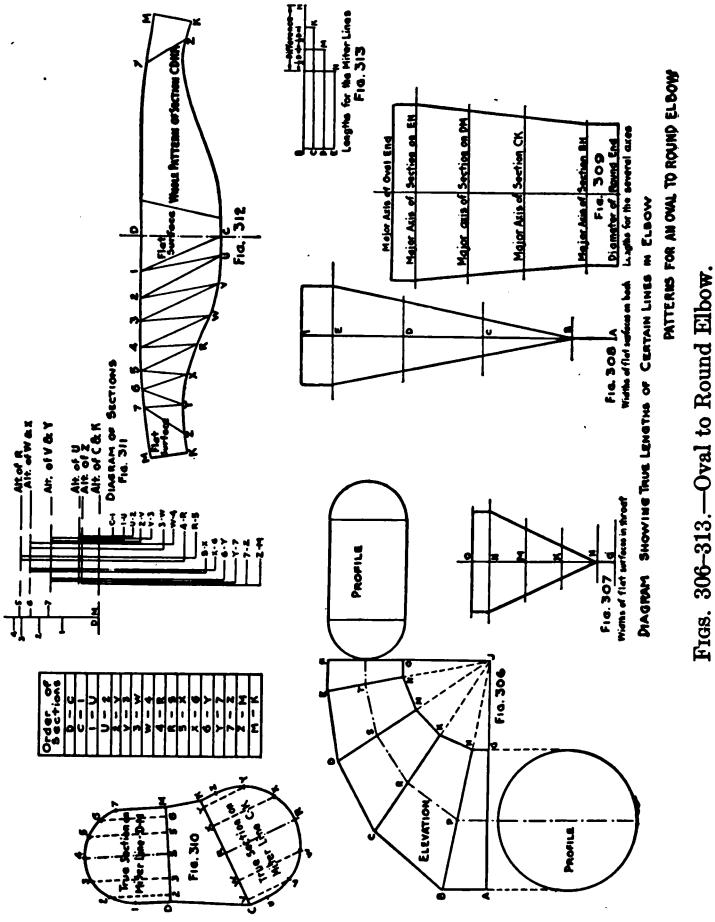

FIGS. 306-313.—Oval to Round Elbow.

Upon any vertical line a stretchout of the throat of Fig. 306 is made as shown by points *O*, *N*, *M*, *K*, *H*, and *G* of Fig. 307. Through each of these points perpendicular lines are drawn. Upon lines *O* and *N* one-half of the straight line in the oval profile must be laid down on each side of points *O* and *N*. Straight lines

Digitized by Google

connecting these points produce a rectangle, showing the true shape of the flat surface in the throat of the last piece of the elbow. If this surface were allowed to taper, the oval pipe to which the elbow is joined would not fit properly. Since the flat surface is to disappear at the throat of the first piece, straight lines may be drawn from the extremities of line *N* to the point *H*, thus establishing widths at *M* and *K*.

The widths of the flat surfaces on the back of the elbow, as shown by Fig. 308, are developed in exactly the same manner, and the description given above may be used again by substituting the word *back* and the letters that correspond.

Since the major axis (long diameter) of the oval is greater than the diameter of the circular profile a gradual increase must also be made in the major axes of the sections formed by the several miter lines. A stretchout of the center line of Fig. 306 is made as shown by Fig. 309. On the horizontal line *T* the long diameter of the oval profile is placed (one-half on each side of point *T*), while on line *P* one-half of the diameter of the round profile is placed. Straight lines are then drawn connecting these points, thereby establishing the major axes of the sections formed by miter lines *DM* and *CK*.

The patterns for the first and last pieces can be drawn by the method described in Chapter III since they are pieces of regular five-piece elbows.

The intermediate pieces of the elbow must be developed separately, either by triangulation or sectional development. The third piece of the elbow has been selected for treatment in this description, but the second and fourth pieces are developed in exactly the same manner.

Figure 310 shows the third piece removed from Fig. 306, in order to avoid confusion of lines. At the center points *R* and *S* perpendicular center lines are erected. Upon the center line at *S* one-half of the major axis of section *DM*, Fig. 309, is set off; and upon the center line at *R*, one-half of the major axis of section *CK*, Fig. 309, is set off. These points are lettered 4 and *R* as shown. Perpendiculars are now erected at points *D*, *M*, *K*, and *C*. Upon these lines the following lengths are placed: line *D*–1 is made equal to one-half of line *D* in Fig. 308; line *C*–*U* one-half of line *C* in Fig. 308; line *M*–7 one-half of line *M* in Fig. 307; and line *K*–*Z* one-half of line *K* in Fig. 307. Arcs are now drawn connecting

Digitized by Google

points 1, 4, and 7, and also points *U*, *R*, and *Z*. Sections are thus formed on cutting planes *DM* and *CK*, and while these are not absolutely true sections, as defined by the laws of projection, they are near enough for all practical purposes and can be constructed in much less time.

The arcs of these sections are divided into equal spaces and the divisions given numbers or letters as shown in Fig. 310. Perpendicular lines are dropped from each division until they intersect lines *DM* and *CK*.

The order of sections is now decided upon as shown by the order given upon the drawing. The base lines for the sections may or may not be drawn in Fig. 310, according to the amount of dependence to be placed on their guidance.

The diagram of sections, Fig. 311, shows the condensed form in which the experienced draftsman usually develops this feature of the problem. All of the altitudes of points in the profile of one end of the transition are placed upon a vertical line. From the intersection of this vertical line with a horizontal base line all of the base lines from Fig. 310 are measured. Above this horizontal line, other horizontal lines are drawn at distances representing the altitudes of the points in profile of the other end of the transition.

From Fig. 310 base lines are laid down upon the horizontal line of Fig. 311, and perpendicular lines are erected to the proper altitude. The upper base of the section can be measured with the dividers and used in developing the pattern.

Supposing the true length of the upper base of Section *R* to 5 is desired. Starting at the short line labeled *R*–5, the vertical line is followed upwards until it meets the horizontal line labeled Alt. of *R*. The distance between this point and point 5 on the vertical line at the left of the diagram is the required distance.

It sometimes happens that two base lines have the same lengths as is the case with *C*–1 and 1–*U*. To find the true lengths, starting at *C*–1, the vertical line is followed upwards until it meets the base line of the diagram (points *C* and *K* having no altitude) and from this point the distance to point 1 on the vertical line at the left of the diagram is measured. Again starting at 1–*U* the same vertical line is followed upwards until it meets the horizontal line representing the altitude of *U*. The distance from this point to point 1 at the left of the diagram is the true length sought.

Starting with a vertical line, Fig. 312, upon which the length

Digitized by Google

of line *DC* of Fig. 310 has been placed, the pattern is developed in the usual manner by following the order of development, by sections, which has already been determined. The flat surfaces should be marked to aid the workman in forming the metal. The whole pattern may be produced by copying the pattern which has been developed on the other side of line *DC*.

Digitized by Google

Problem 54

BREECHES

94. Breeches.—Breeches is the trade name given to a transition between two round pipes and an oval or round pipe of larger diameter. The plan, Fig. 314, is that of a transition between two round pipes of unequal diameters, and an oval pipe. The plan is first drawn showing the branch pipes in their proper location. A horizontal and a vertical center line are then drawn in the oval profile. As will be seen upon examination the horizontal center line divides the figure into two equal parts; therefore, it is capable of being developed by sections. The vertical center line of the oval will be used as the miter line between the two branches.

The profiles of Fig. 314 are divided, as shown, after which extension lines are dropped and an elevation, Fig. 315, constructed. Each point in the profiles should be properly located by extension lines in the elevation.

The order of development should now be decided upon. As in the case of the split header, Chapter XV, the fitting should be considered from the standpoint of two separate transitions between oval and round pipes. In this problem the large branch is treated first and the order of development determined as follows:

ORDER OF DEVELOPMENT FOR LARGE BRANCH

Triangles	Triangles	Triangles	Intersection with Miter Line:
5 to *G*	*F* to 3	2 to *B*	Base line 3 to *O*
G to 4	3 to *E*	*B* to 1	Base line *C* to *N*
4 to *F*	3 to *C*	1 to *A*	Base line 2 to *M*
	C to 2		Base line *B* to *K*
			Base line 1 to *H*

The base lines corresponding to this order are now drawn in Fig. 314 and their points of intersection with the miter line indicated by letters *O*, *N*, *M*, *K*, and *H* as shown. These are given in the fourth column of the above table, and should be placed in the diagram of triangles, Fig. 318, exactly as indicated; that is, base line 3 to *O* should be measured from point 3 in the diagram of triangles and not from point *C*.

The diagram of triangles is now drawn by taking the base lines

Digitized by Google

from Fig. 314 in the order given above. Perpendiculars are erected as shown and since the planes of the transition are parallel all triangles will have the same altitude. This altitude is shown

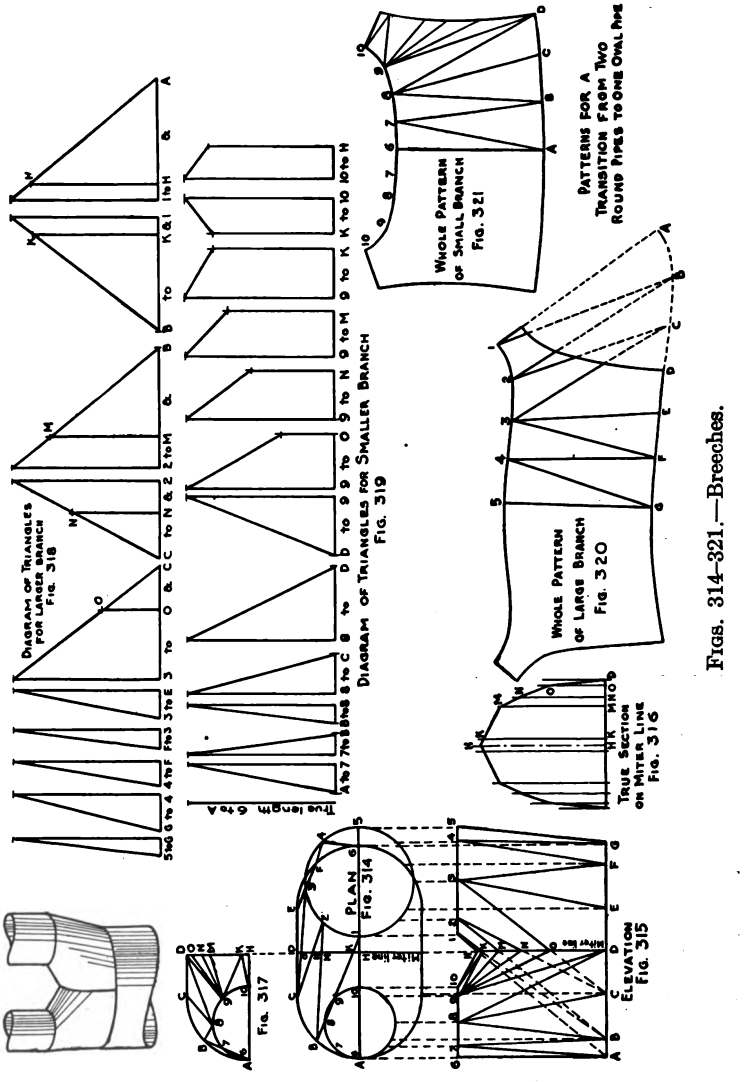

Figs. 314–321.—Breeches.

by line 6–*A* of Fig. 315. Perpendiculars erected at points *O*, *N*, *M*, *K*, and *H* establish the position of these points on the hypote-

Digitized by Google

nuses of their respective triangles and enable the true lengths of these lines to be measured.

An elevation of these elements is now drawn in Fig. 315. Where these elements intersect the miter line the elevation of points *O*, *N*, *M*, *K*, and *H* will be established.

A true section on the miter line, Fig. 316, is now constructed by transferring the spacing of miter line *HD* in Fig. 314 to any horizontal line. Perpendiculars are erected at each of these points and corresponding altitudes, taken from Fig. 315, placed on them. Lines connecting the points thus located constitute a true half section on the miter line. The whole section may be produced, if desired, by copying on the other side of center line *H*, the half already developed.

The pattern for the large branch is started by placing on any vertical line a distance equal to the hypotenuse of triangle 5 to *G*. The pattern is developed in the usual manner by following the order of development previously determined upon.

After the pattern for a complete transition has been developed the miter cut is drawn in as follows: The distance from point *C* to point *O* on the hypotenuse of triangle 3–*O*–*C* is laid off from point *C* on line *C*–3 of Fig. 320. Similarly, the distances *C* to *N*, *B* to *M*, *B* to *K*, and *A* to *H* are laid off from points *C*, *B*, and *A* on their corresponding lines in Fig. 320. A curved line passing through these points gives the miter cut of the pattern. Particular attention must be given to keeping the direction in which these measurements are taken, the same in the plan, in the diagram of triangles, and in the pattern.

In order to miter the small branch with the large branch, the same section must be used on the miter line. Figure 317 shows a half plan of the small branch removed from Fig. 314 in order to avoid confusion of lines. All of the intersections have been transferred and it is necessary to consider a new order of development which is given below.

ORDER OF DEVELOPMENT FOR SMALL BRANCH

True Length 6 to *A*	Triangle 8 to *C*	Section 9 to *M*
Triangle *A* to 7	Triangle 8 to *D*	Section 9 to *K*
Triangle 7 to *B*	Triangle *D* to 9	Section *K* to 10
Triangle *B* to 8	Section 9 to *O*	Section 10 to *H*
	Section 9 to *N*	

Digitized by Google

The diagram of triangles and sections, Fig. 319, is now constructed by taking the base lines from Fig. 317. The triangles have a common altitude equal to lines 6–*A* of Fig. 315. One of the perpendiculars in each section also has this altitude, but the altitudes of points *O*, *N*, *M*, *K*, and *H* are made to correspond to the altitudes of similar points in the true section, Fig. 316.

The pattern, Fig. 321, is started by placing upon any vertical line a distance equal to the true length line 6–*A*. The development proceeds in the usual manner until completed. Spaces *A* to *D* are taken from corresponding spaces in Fig. 317, as are also spaces 6 to 10. Spaces *D* to *H*, however, are taken from corresponding spaces in the true section, Fig. 316. The development may be copied on the other side of line 6–*A* in order to obtain the full pattern.

Necessary laps for riveting the pieces together must be added to these patterns.

Digitized by Google

Problem 55

COAL HOD

95. The Coal Hod.—The coal hod is made in many different designs, and since there is no standard the manufacturer draws the design to suit his own ideas.

Figure 324 shows a half-profile of a coal hod, and since the center line divides the object into two equal parts the pattern can be developed by sections.

Figure 322 shows the plan of the coal hod after it has been cut by an imaginary plane and so placed that the cutting plane assumes a horizontal position.

Figure 323 is a half-profile of the bottom located in its relative position by means of extension lines.

Both profiles should be divided into equal spaces and each division numbered or lettered as shown. It is evident that line 1–10 of Fig. 324 is longer than line 1–10 of Fig. 322 (since a straight line is the shortest distance between two points). Because of this fact the distances between points in the profile, Fig. 324, are not true lengths.

Figure 325, which is sometimes called an extended section, must be developed in order to ascertain the true distances between these points. A tangent parallel to the bottom line of the coal hod is drawn through the plan as shown in Fig. 322. Since point 4 is the lowest part of the curve the tangent must pass through this point. Extension lines are then carried from each point in the curve until they meet the tangent as shown in Fig. 322.

Upon any straight line, Fig. 325, the exact spacing between points 1 to 9 of Fig. 324 are laid off. Perpendiculars are erected at each point, and upon each perpendicular a distance equal to that from a correspondingly numbered point in the curve to the tangent of Fig. 322 is set off.

A curve traced through the points thus obtained will give the exact distance between these points, and these must be used in developing the pattern.

The order of sections must now be determined, such as will be found on the drawing, and a diagram of sections, Fig. 326, constructed. The base lines for this diagram are taken from the plan, Fig. 322. The altitudes 1 to 10 are taken from Fig. 324, and the altitudes *A* to *K* from Fig. 323.

Digitized by Google

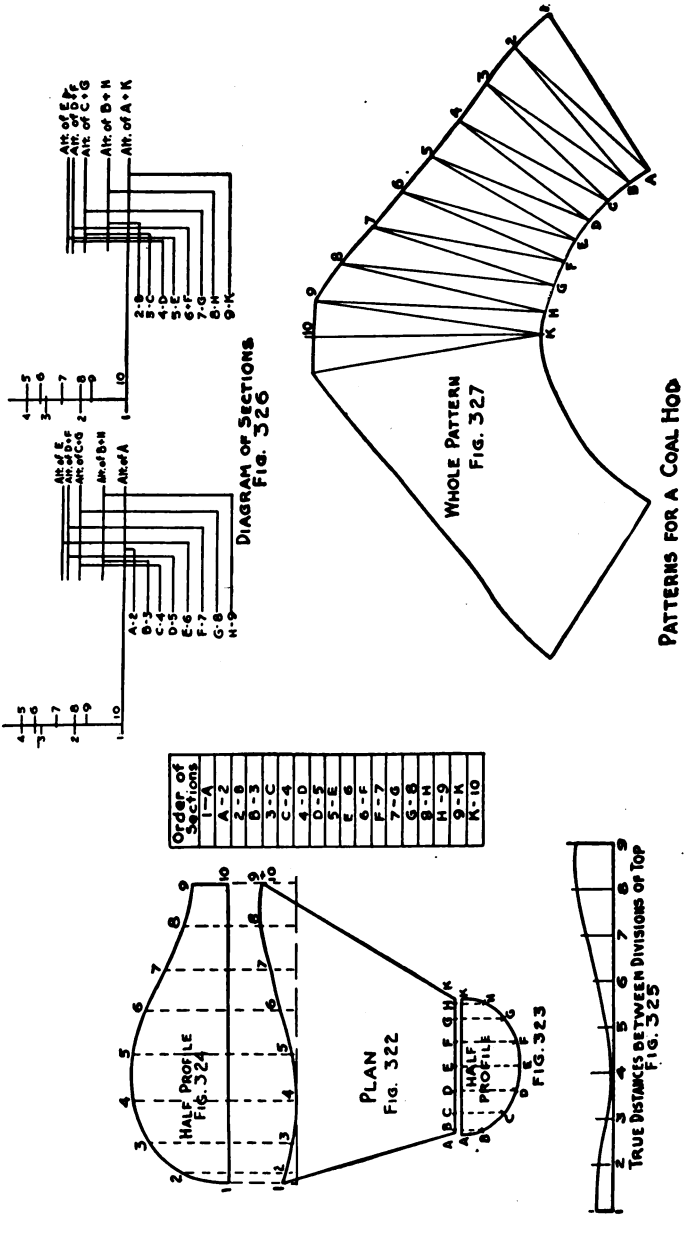

Figs. 322–327.—Coal Hod.

Digitized by Google

The pattern is started by placing upon any straight line a distance equal to line 1–*A* of Fig. 322, this being a true length line since it rests on the horizontal plane. From point *A* point 2 is established and the pattern proceeds in the usual manner, using Fig. 325 for the spacing between the numbered points, and Fig. 323 for the spacing between the lettered points. The space between points 9 and 10 is taken from Fig. 324, and the line *K*–10 of the pattern is taken from line *K*–10 of Fig. 322 since it rests on the horizontal cutting plane and is, therefore, a true length.

The coal hod is generally made from two pieces of metal, locks being added parallel to lines *A*–1 and *K*–10 of pattern. However, if it is desired that the object be made from one piece, the development may be copied on the other side of line *K*–10 in Fig. 327.

Digitized by Google

TABLE A

U. S. STANDARD GAGE FOR SHEET AND PLATE IRON AND STEEL, 1893

Number of Gage.	Approximate Thickness in Fractions of an Inch.	Approximate Thickness in Decimal Parts of an Inch.	Weight per Square Foot in Ounces.	Weight per Square Foot in Pounds.
0000000	1/2	0.5	320	20
000000	15/32	0.4688	300	18.75
00000	7/16	0.4375	280	17.50
0000	13/32	0.4063	260	16.25
000	3/8	0.375	240	15
00	11/32	0.3438	220	13.75
0	5/16	0.3125	200	12.50
1	9/32	0.2813	180	11.25
2	17/64	0.2656	170	10.625
3	1/4	0.25	160	10
4	15/64	0.2344	150	9.375
5	7/32	0.2188	140	8.75
6	13/64	0.2031	130	8.125
7	3/16	0.1875	120	7.5
8	11/64	0.1719	110	6.875
9	5/32	0.1563	100	6.25
10	9/64	0.1406	90	5.625
11	1/8	0.125	80	5
12	7/64	0.1094	70	4.375
13	3/32	0.0938	60	3.75
14	5/64	0.0781	50	3.125
15	9/128	0.0703	45	2.813
16	1/16	0.0625	40	2.5
17	9/160	0.0563	36	2.25
18	1/20	0.05	32	2
19	7/160	0.0438	28	1.75
20	3/80	0.0375	24	1.50
21	11/320	0.0344	22	1.375
22	1/32	0.0313	20	1.25
23	9/320	0.0281	18	1.125
24	1/40	0.025	16	1
25	7/320	0.0219	14	0.875
26	3/160	0.0188	12	0.75
27	11/640	0.0172	11	0.688
28	1/64	0.0156	10	0.625
29	9/640	0.0141	9	0.563
30	1/80	0.0125	8	0.5
31	7/640	0.0109	7	0.438
32	13/1280	0.0102	6½	0.406
33	3/320	0.0094	6	0.375
34	11/1280	0.0086	5½	0.344
35	5/640	0.0078	5	0.313
36	9/1280	0.007	4½	0.281
37	17/2560	0.0066	4¼	0.266
38	1/160	0.0063	4	0.25

Digitized by Google

INDEX

Anvil, mechanical drawing of, 2
Apron for conical roof flange, 93
Area of circle, 36
    cylinder, lateral, 32
    frustum, 91
    lateral, of cone, 82
    oval, 193
    rectangle, 16
    sector, 82
    trapezoid, 23
Areas, equivalent, 193
Ash barrel, 110
    quantity production, 110
    related mathematics, 117
Ash pan with semicircular back, 153
    related mathematics, 155
Ash sifter, rotary, 156
    related mathematics, 160
Atomizing sprayer, 148
    related mathematics, 150
Axis of cone, 80

Backset method, 63
Barrel, ash, 110
    related mathematics, 117
Bending lines, 7
Board, drawing, 3
Boat pump, 125
    related mathematics, 127
Boot, center offset, 207
Border lines, 7
Boxes, register, 143
    related mathematics, 145
Bread pan, iron, 21
    related mathematics, 23
Breeches, 221

Candy pan, 17
    related mathematics, 19
Can, garbage, 41
    related mathematics, 42
Can, sprinkling, 120
    related mathematics, 123
Cap, window, 182
Center line radius, 61
Center lines, 8
Center offset boot, 207
Chimney tube, galvanized, 30
    related mathematics, 32
Circle, area of, 36
    circumference of, 32
    diameter, from area, 43
    filing, 10
Circumference of circle, 32
Cleat, sheet metal, 12
    related mathematics, 13
Coal hod, 225
Combination of various solids, 147
Conductor head, 177
    related mathematics, 178
Cone, axis of, 80
    frustums of, 161
    profile of, 80
    revolution of, 79
    right, 80
    scalene, 186
    scalene, frustum of, 204
    triangulation of scalene, 185
Conical flower holder, 80
    related mathematics, 82
Conical roof flange, 89
    related mathematics, 91

Digitized by Google

Cover, pitch top, 83
related mathematics, 85
Cubic inches in gallon, 40
Cup, half-pint, 34
related mathematics, 36
Cup strainer, 162
related mathematics, 164
Curved elbow in rectangular pipe, 106
related mathematics, 106
Cutting planes, 119
Cylinder, cut by planes, 45
intersecting, 65
lateral area of, 32
volume of, 40
wired, 29

Definition, miter line, 46
Developed and extended sections, 215
Developments by sections, 203
Diagonal offset, 103
related mathematics, 105
Diameter of circle, 43
Diameters, solids of revolution, 98
Dimension lines, 8
Dimensions, full size, 41
over-all, 16
witness, 42
Dipper, short handled, 165
related mathematics, 167
Drafting, sheet metal, 1
Drawing board, 3
Drawing instruments, 3
Drawings, mechanical, 2
pictorial, 1
Dripping or roasting pan, 136
related mathematics, 138

Elbows,
curved, in rectangular pipe, 106
related mathematics, 106
four-piece, 90°, 55
long radius, 57
related mathematics, 58
oval to round, 216
three-piece rectangular, 96
related mathematics, 97
two-piece, 49
two-piece, 60°, 52
Elbows, weight of, 61
Elements of surface, 80
Extension lines, 8
Extended sections, developed and, 215

Face miters, 173, 180
Figures, rectilinear, 1
Filing circles, 10
Flange, conical roof, 89
apron for conical roof, 93
related mathematics, 91
Flange, roof, 129
Flaring pan, rectangular, 140
related mathematics, 142
Flower holder, conical, 80
related mathematics, 82
Four-piece 90° elbow, 55
Frustum, area of, 91
Frustums of cones, 161
rectangular pyramids, 135
scalene cone, 204
volume of, 167

Gallon, cubic inches in, 40
Galvanized chimney tube, 30
related mathematics, 32
Galvanized match box, 14
related mathematics, 16
Garbage can, 41
related mathematics, 42
witness dimensions, 42
Girth, 32

Half-pint cup, 34
related mathematics, 36
Hammer lock, 106
Head, conductor, 177
related mathematics, 178
Header, square to round split, 210
related mathematics, 213
Hod, coal, 225
Horizontal lines, 4

Index of problems, 235
Instruments, drawing, 3
Intersecting cylinders, 65
rectangular prisms, 95

Digitized by Google

Iron bread pan, 21
related mathematics, 23

Lateral area, of cylinder, 32
of cone, 82
Layout of cleat, 12
Lettering, 9
Lines, bending, 7
border, 7
center, 8
dimension, 8
extension, 8
horizontal, 4
object or projection, 7
vertical, 5
Liquid measures, 169
related mathematics, 171
standard sizes for, 171
Lock, hammer, 106
Long radius elbow, 57
related mathematics, 58

Match box, galvanized, 14
related mathematics, 16
Materials, schedule of, 150
Measures, liquid, 169
related mathematics, 171
Mechanical drawings, 1
Method, backset, 63
Miter line, definition of, 46
rise of, problem on, 58
Miters, face, 180
Miter, square return, 174
Miters, return and face, 173
Moulding, rake, 184

Objectives of problems,
combinations of various solids, 147
cones of revolution, 79
cylinders cut by planes, 45
developed and extended sections, 215
developments by sections, 203
frustums of cone, 161
frustums of rectangular pyramids, 135
intersecting cylinders, 65

Objectives of problems,
intersecting rectangular prisms, 95
quantity production, 109
rectilinear figures, 11
return and face miters, 173
sections formed by cutting planes, 119
triangulation of scalene cone, 185
triangulation of transition piece, 195
wired cylinders, 29
Object lines, 7
Offset, center boot, 207
Offset, diagonal, 103
related mathematics, 105
Offset, rectangular pipe, 100
related mathematics, 102
Orthographic projection, 2
Oval, area of, 193
Oval pipe and second piece of elbow, transition between, 200
Oval to round elbow, 216
Oval to round transition, 191
related mathematics, 193
Over-all dimensions, 16

Pail, painter's, 38
related mathematics, 40
Painter's pail, 38
related mathematics, 40
Pan, ash, with semicircular back, 153
related mathematics, 155
Pan, bread, iron, 21
related mathematics, 23
Pan, candy, 17
related mathematics, 19
Pan, roasting or dripping, 136
related mathematics, 138
Pans, rectangular flaring, 140
related mathematics, 142
Parallel line developments, rules for, 75
Parer, vegetable, 86
Pencil, 6
Pictorial drawing, 1
Pipe, curved elbow in rectangular, 106
related mathematics, 106

Digitized by Google

Pipe offset, rectangular, 100
related mathematics, 102
Pipe, standard cuts of, 61
Pitch top cover, 83
related mathematics, 85
Planes, cylinders cut by, 45
Prisms, intersecting rectangular, 95
Problems, index of, 235
Projection lines, 7
Projections, orthographic, 2
Pump, boat, 125
related mathematics, 127
Pyramids, rectangular, frustums of, 135

Quantity production, ash barrel, 110

Rake moulding, 184
Rectangle, area of, 16
Rectangular elbow, three-piece, 96
related mathematics, 97
Rectangular flaring pans, 140
related mathematics, 142
Rectangular pipe, curved elbow in, 106
Rectangular pipe offset, 100
related mathematics, 102
Rectangular pyramids, frustums of, 135
Rectilinear figures, 1
Register boxes, 143
related mathematics, 145
Related mathematics,
ash barrel, 117
ash pan, 155
atomizing sprayer, 150
boat pump, 127
candy pan, 19
chimney tube, 32
conductor head, 178
conical flower holder, 82
conical roof flange, 91
cup strainer, 164
curved elbows, 106
diagonal offset, 105
dripping or roasting pans, 138
elbows, 58, 97
half-pint cup, 36
Related mathematics,
galvanized match box, 16
garbage can, 42
iron bread pan, 23
liquid measures, 171
oval to round transition, 193
painter's pail, 40
pitch top cover, 85
rectangular flaring pan, 142
rectangular pipe offset, 102
register boxes, 145
rotary ash sifter, 160
sheet metal cleat, 13
short handled dipper, 167
split header, 213
sprinkling can, 123
tangent tees and tee joints, 76
Return and face miters, 173
Revolution, solids of, 80, 97
Right cone, 80
Roasting pan, 136
related mathematics, 138
Roof flange, 129
Roof flange, conical, 89
related mathematics, 91
Rotary ash sifter, 156
related mathematics, 160
Round elbow, oval to, 216
Round transition, oval to, 191
related mathematics, 193
Round transition, square to, 188

Scalene cone, 186
frustum of, 204
triangulation of, 185
Scale, triangular, 6
Schedules of materials, 150
Scoop, 46
Sections, developed and extended, 215
Sections, developments by, 203
Sections formed by cutting planes, 119
Sector, area of, 82
Sheet metal cleat, 12
related mathematics, 13
Sheet metal drafting, 1
Short handled dipper, 165
related mathematics, 167

Digitized by Google

Sifter, ash, rotary, 156
related mathematics, 160
Solids, combination of various, 147
Solids of revolution, 80, 97
Split header, square to round, 210
related mathematics, 213
Sprayer, atomizing, 148
related mathematics, 150
Sprinkling can, 120
related mathematics, 123
Square pipe, transition with second piece of elbow, 196
Square return miter, 174
Square to round split header, 210
related mathematics, 213
Square, T-, 3
Square to round transition, 188
Standard cuts of pipe, 61
Standard sizes for liquid measures, 171
Strainer, cup, 162
related mathematics, 164

Tables,
deduction for small end cuts, 60
standard big end cuts for pipe and elbows, 61
standard sizes for flaring liquid measures, 171
United States standard gage for sheet and plate iron and steel, 1893, 228
weights per square foot of galvanized and black sheets, 62
Tangent tee at right angles, 69
not at right angles, 75
Tangent tees and tee joints, 76
related mathematics, 76
Tee joint at right angles, 66
not at right angles, 72
Three-piece rectangular elbow, 96
related mathematics, 97
Titles, 9
Transition, oval pipe and second piece of elbow, 200
square pipe and second piece of elbow, 196
square to round, 188
triangulation of pieces, 195
Transition, oval to round, 191
related mathematics, 193
Trapezoid, area of, 23
Triangles, 4
Triangular scale, 6
Triangulation of scalene cones, 185
of transition pieces, 195
T-square, 3
Two-piece elbow, 49
Two-piece 60° elbow, 52

Vegetable parer, 86
Vertical lines, 5
Volume of cylinder, 40
Volume of frustum, 167

Window cap, 182
Wired cylinders, 29
Witness dimensions, 42

Digitized by Google

Digitized by Google

INDEX OF PROBLEMS

NO. OF PROBLEM		PAGE
1.	Laying out a Metal Cleat	12
2.	Galvanized Match Box	14
3.	Candy Pan	17
4.	Bread Pan	21
5.	Galvanized Chimney Tube	30
6.	Half-pint Cup	34
7.	Painter's Pail	38
8.	Garbage Can	41
9.	The Scoop	46
10.	Two-piece Elbow	49
11.	Two-piece 60° Elbow	52
12.	Four-piece 90° Elbow	55
13.	Long Radius Elbows	57
14.	Backset Method	63
15.	Tee Joint at Right Angles	66
16.	Tangent Tee at Right Angles	69
17.	Tee Joint Not at Right Angles	72
18.	Tangent Tee Not at Right Angles	75
19.	Conical Flower Holder	80
20.	Pitch Top Cover	83
21.	Vegetable Parer	86
22.	Conical Roof Flange	89
23.	Apron for Conical Roof Flange	93
24.	Three-piece Rectangular Elbow	96
25.	Rectangular Pipe Offset	100
26.	Diagonal Offset	103
27.	Curved Elbow in Rectangular Pipe	106
28.	Ash Barrel	110
29.	Sprinkling Can	120
30.	Boat Pump	125
31.	Roof Flange	129
32.	Dripping or Roasting Pan	136
33.	Rectangular Flaring Pans	140
34.	Register Boxes	143
35.	Atomizing Sprayer	148
36.	Ash Pan with Semicircular Back	153
37.	Rotary Ash Sifter	156

Digitized by Google

NO. OF PROBLEM		PAGE
38.	Cup Strainer	162
39.	Short Handled Dipper	165
40.	Liquid Measures	169
41.	Square Return Miter	174
42.	Conductor Head	177
43.	Face Miters	180
44.	Window Cap	182
45.	Scalene Cone	186
46.	Square to Round Transition	188
47.	Oval to Round Transition	191
48.	Transition between a Square Pipe and the Second Piece of an Elbow	196
49.	Transition between an Oval Pipe and the Second Piece of an Elbow	200
50.	The Frustum of a Scalene Cone	204
51.	Center Offset Boot	207
52.	Square to Round Split Header	210
53.	Oval to Round Elbow	216
54.	Breeches	221
55.	Coal Hod	225

Digitized by Google

Digitized by Google

Digitized by Google

Digitized by Google

89089666366

B89089666366A

'his book may be kept

FOURTEEN DAYS

A fine of TWO CENTS will be charged
for each day the book is kept overtime.

12 Ja '38			
No. 291-B	DEMCO-MADISON-WIS		

Digitized by Google

TDV
.L86

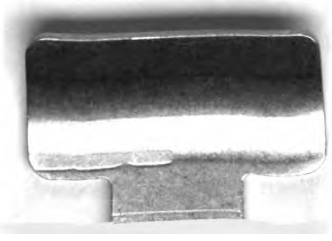

Digitized by Google

b89089666366a

Digitized by Google